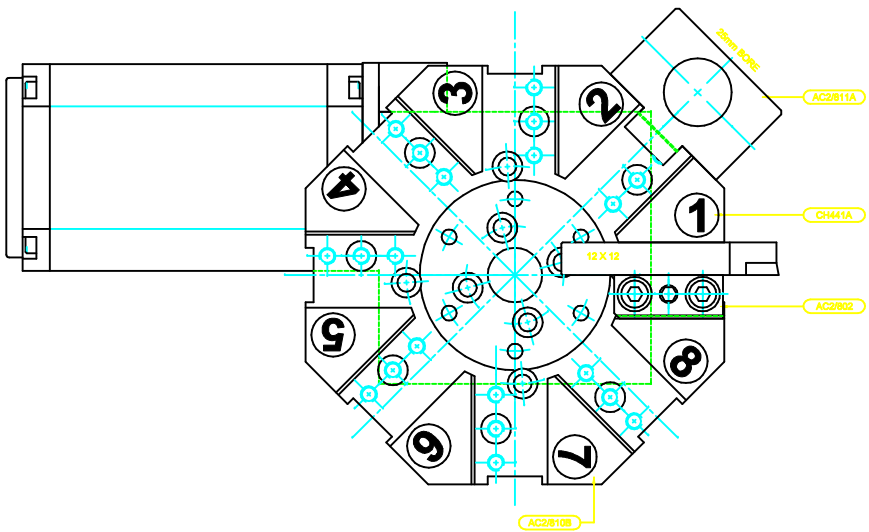

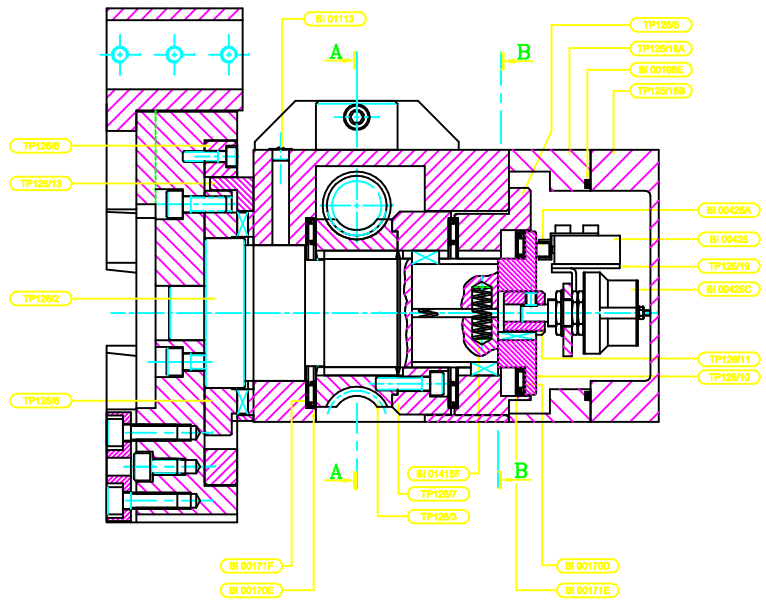

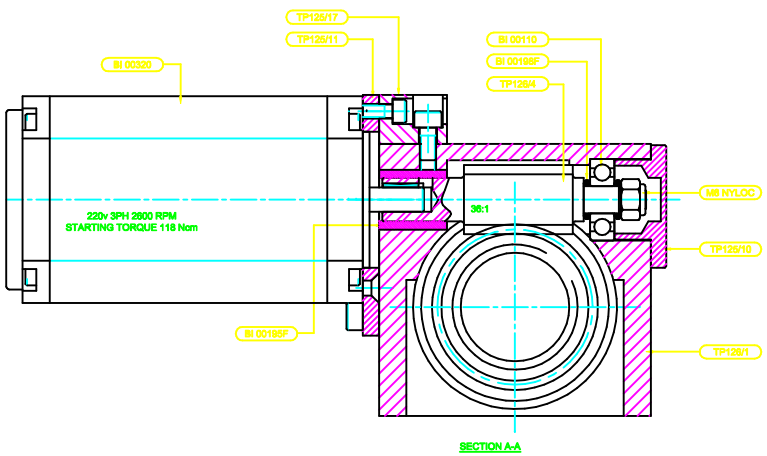

SECTION A-A

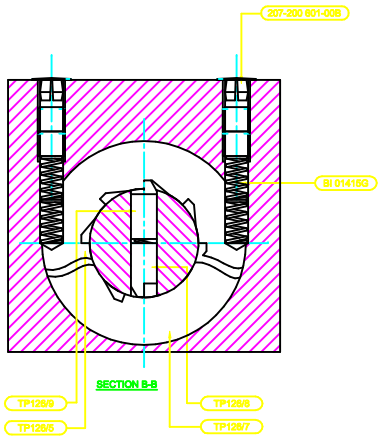

SECTION B-B

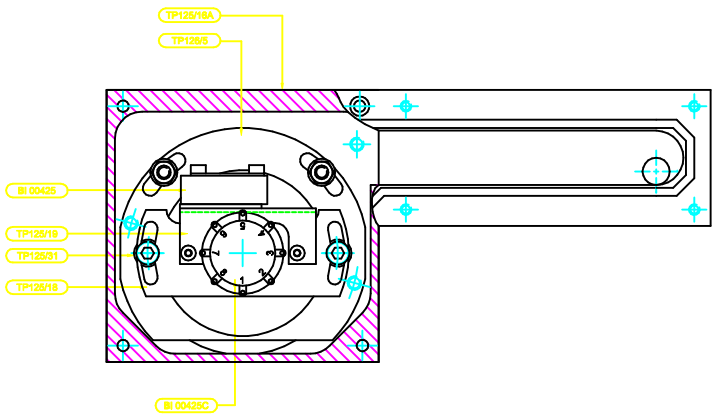

WEIGHT = 15.95kg (WITHOUT TOOLS)

N°.	ORIGINAL ISSUE / ALTERATION		1 / ISSUE
DRAWN	IV	CHECKED	
DATE	29.03.2000		3RD
SCALE	1:1		
MACHINE	CYCLONE		
TITLE	DM6 INDEXING TOOLPOST		
DWG N°.	TP126		

DENFORD
COMPUTERISED MACHINES AND SYSTEMS