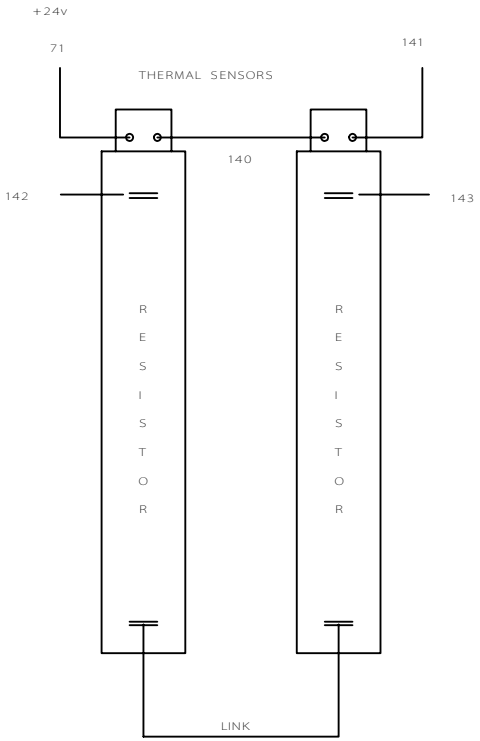

SPINDLE DRIVE CONNECTIONS

(JAGUAR CD 220)

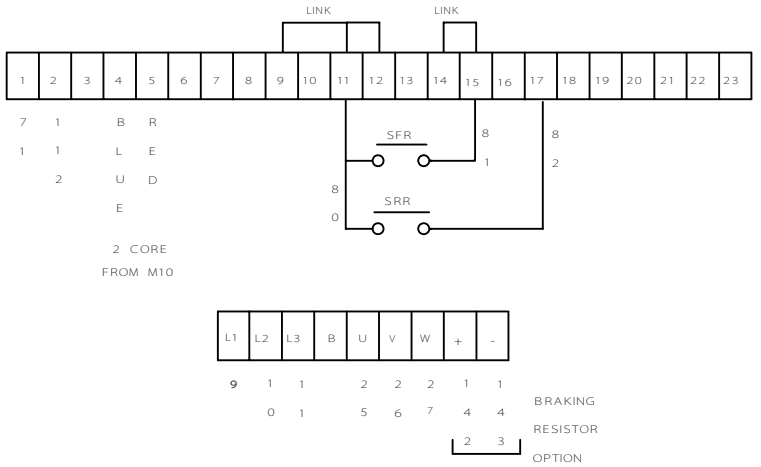

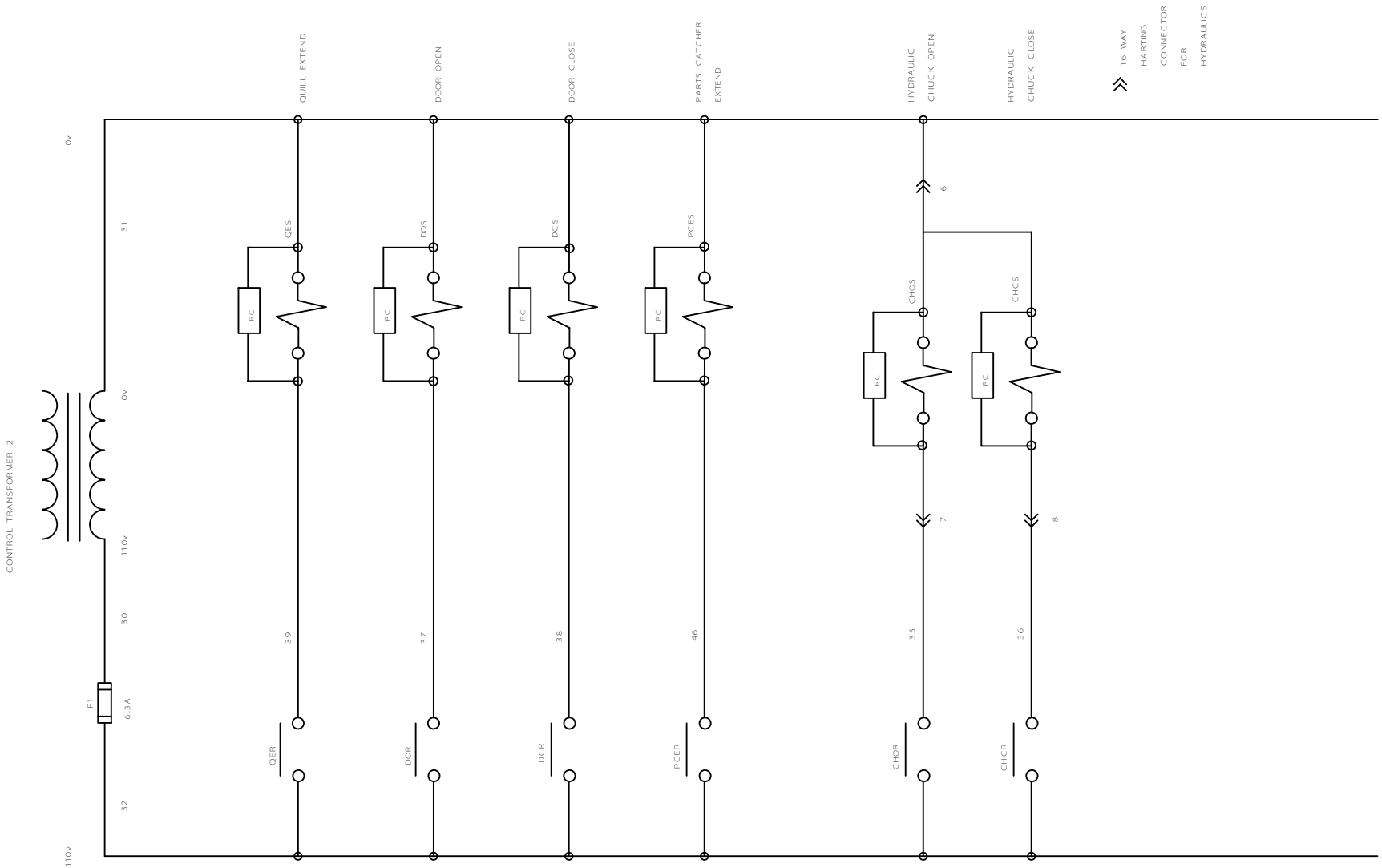

CYCLONE 0T - A 110v SCHEMATIC (OPTIONS)	SHEET 4 OF		
DENFORD MACHINE TOOLS LTD BRIGHOUSE WEST YORKSHIRE	DRN BY A McHENRY	DATE 21 - 5 - 92	A3 - 310541 C

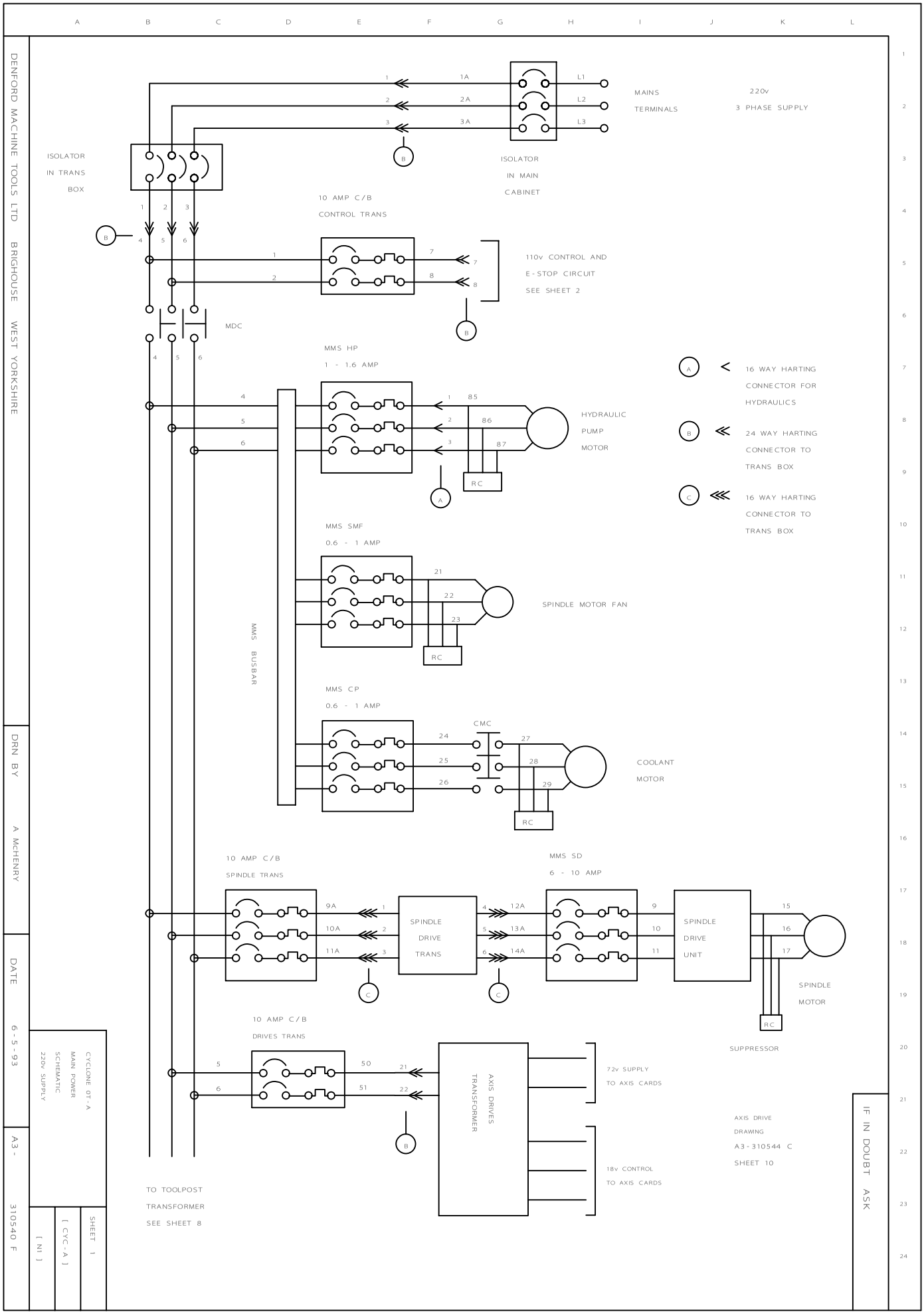
DENFORD MACHINE TOOLS LTD BRIGHOUSE WEST YORKSHIRE
DRN BY A McHENRY
DATE 6-5-93
A3- 310540 F
CYCLONE OT-A
MAIN POWER SCHEMATIC
220v SUPPLY
[N1]
[CYC-A]
SHEET 1
ISOLATOR IN TRANS BOX
ISOLATOR IN MAIN CABINET
MAINS TERMINALS
220v 3 PHASE SUPPLY
10 AMP C/B CONTROL TRANS
110v CONTROL AND E-STOP CIRCUIT SEE SHEET 2
MDC
MMS HP 1 - 1.6 AMP
HYDRAULIC PUMP MOTOR
16 WAY HARTING CONNECTOR FOR HYDRAULICS
24 WAY HARTING CONNECTOR TO TRANS BOX
16 WAY HARTING CONNECTOR TO TRANS BOX
MMS SMF 0.6 - 1 AMP
SPINDLE MOTOR FAN
MMS BUSBAR
MMS CP 0.6 - 1 AMP
CMC
COOLANT MOTOR
10 AMP C/B SPINDLE TRANS
MMS SD 6 - 10 AMP
SPINDLE DRIVE TRANS
SPINDLE DRIVE UNIT
SPINDLE MOTOR
SUPPRESSOR
10 AMP C/B DRIVES TRANS
AXIS DRIVES TRANSFORMER
72v SUPPLY TO AXIS CARDS
18v CONTROL TO AXIS CARDS
AXIS DRIVE DRAWING A3-310544 C SHEET 10
TO TOOLPOST TRANSFORMER SEE SHEET 8
IF IN DOUBT ASK

IF IN DOUBT ASK

X AXIS DRIVE

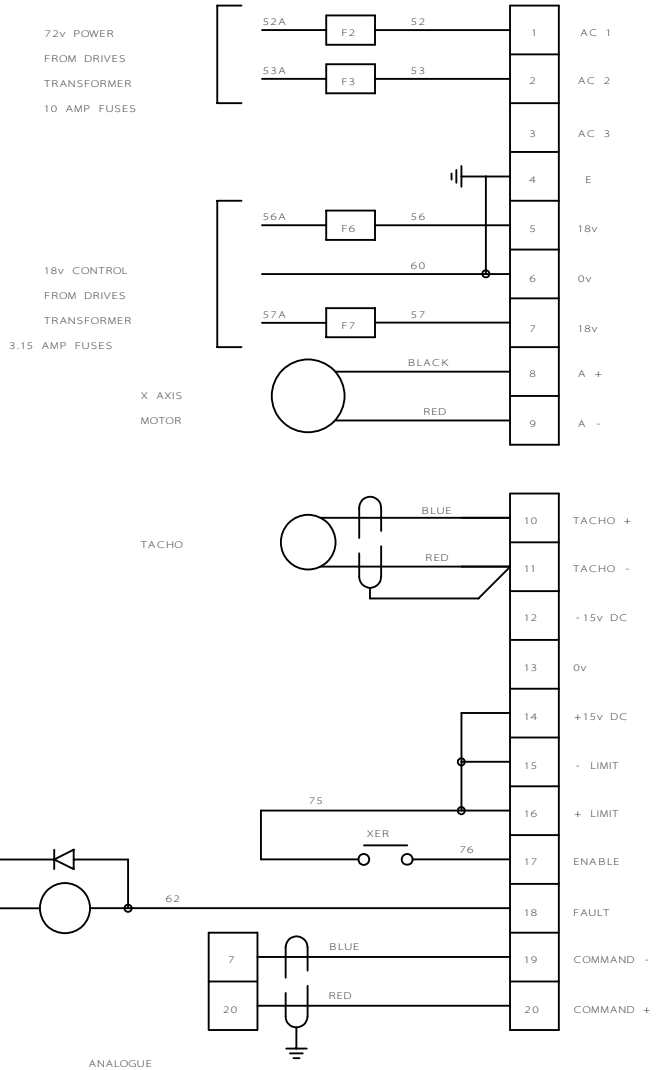

ANALOGUE
FROM M6
CONNECTOR
ON MAIN PCB

Z AXIS DRIVE

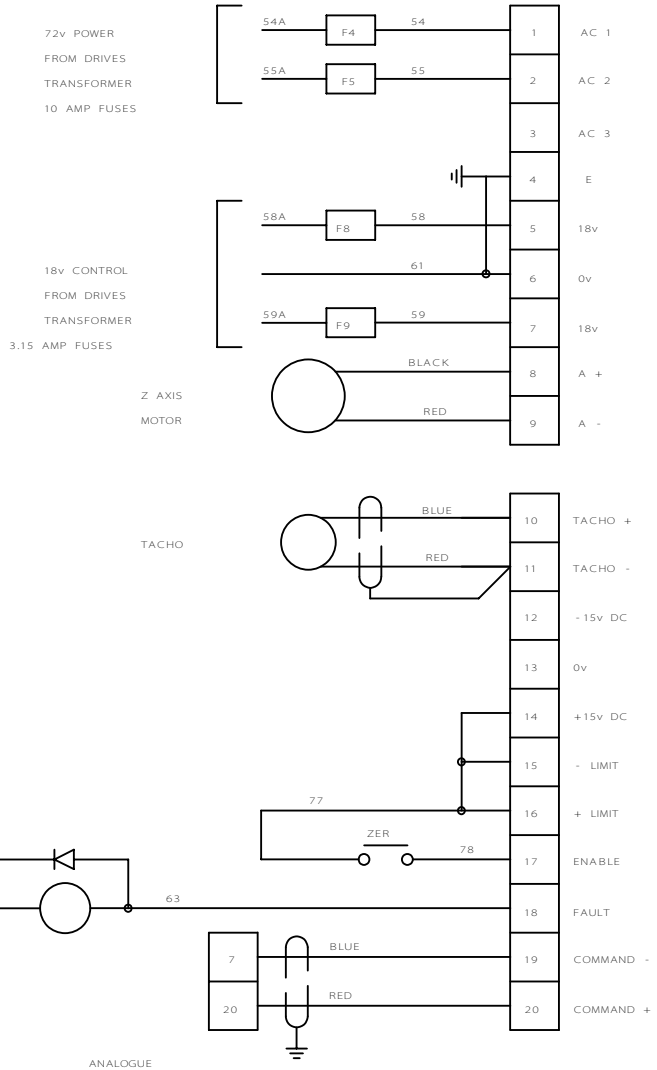

ANALOGUE
FROM M8
CONNECTOR
ON MAIN PCB

CYCLONE 0T-A
NORWIN
DRIVE BOARD
WIRING

SHEET 10

[CYC-A]

[N10]

DENFORD MACHINE TOOLS LTD BRIGHOUSE WEST YORKSHIRE

DRN BY A McHENRY

DATE 29-9-93

A3- 310544 B

IF IN DOUBT ASK

SPINDLE DRIVE CONNECTIONS

LINK

F R REF 0v

U V W L1 L2 L3 + - 1 2 3 4 5 6 7 8 9 10 11 12 13 14 15 16 17 18 19 20 21 22 23

12 13 14 9 10 11 81 82 80 115

71 24v

FERRITE BEADS RS 239-056

3 PHASE SUPRESSOR (BI 00430D)

415v INPUT FROM MMS SD

BRAKING MODULE FITTED UNDERNEATH SPINDLE DRIVE

+ - PA PB

S F R S R R

R E D B L U E

5

M18 SPINDLE DRIVE FAULT SIGNAL

140 142 123 71

3 6 4 2

THERMAL CUT-OUT

141

SPINDLE BRAKING RESISTOR

24v 71 RED

115 BLUE

9

M18 SPINDLE MOTOR THERMAL

SPINDLE MOTOR (WIRED IN DELTA)

7 20

2 CORE FROM M10 20 WAY HONDA F/M CONNECTOR

CYCLONE 0T-A
SPINDLE DRIVE
WIRING DETAILS
(ABB MOTOR)

SHEET 11

[CYC-A]

[N11]

DENFORD MACHINE TOOLS LTD BRIGHOUSE WEST YORKSHIRE

DRN BY A McHENRY

DATE 29-9-93

A3- 310579

HEADSTOCK CONNECTION BOX

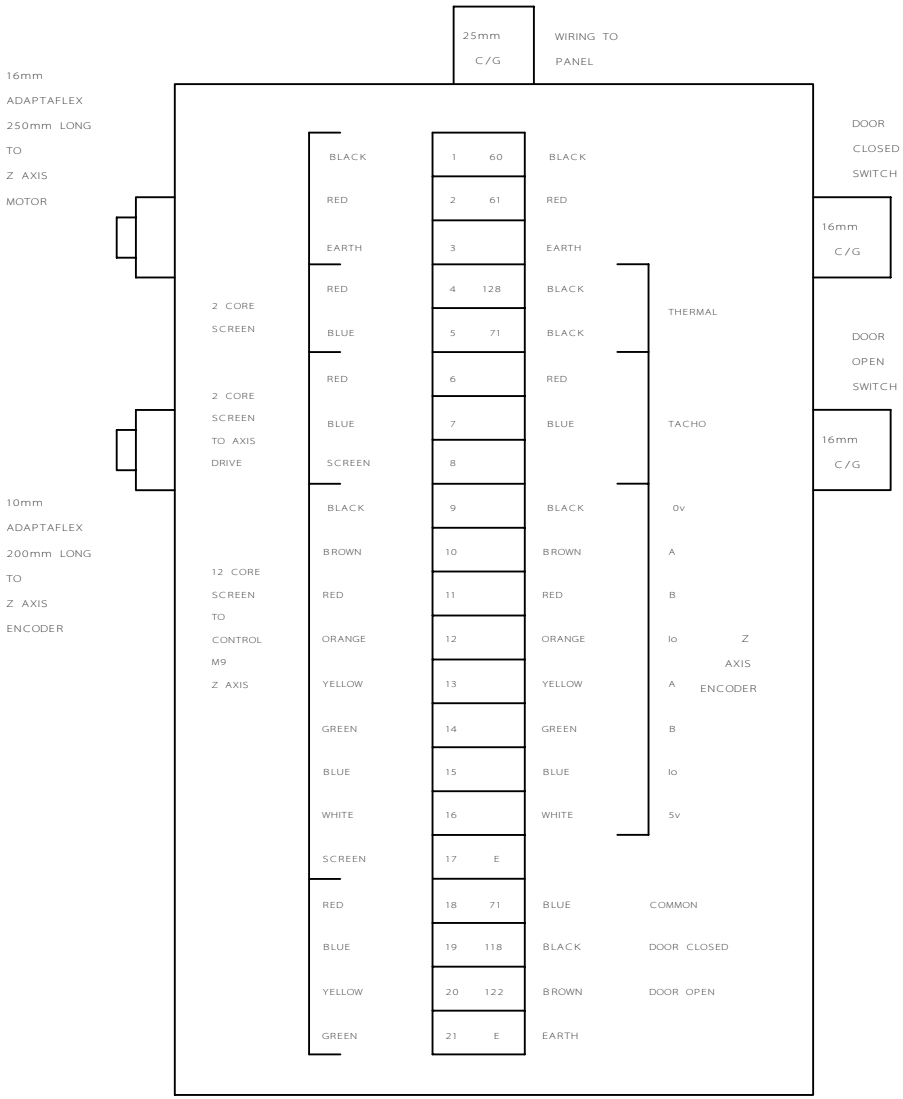

SADDLE CONNECTION BOX

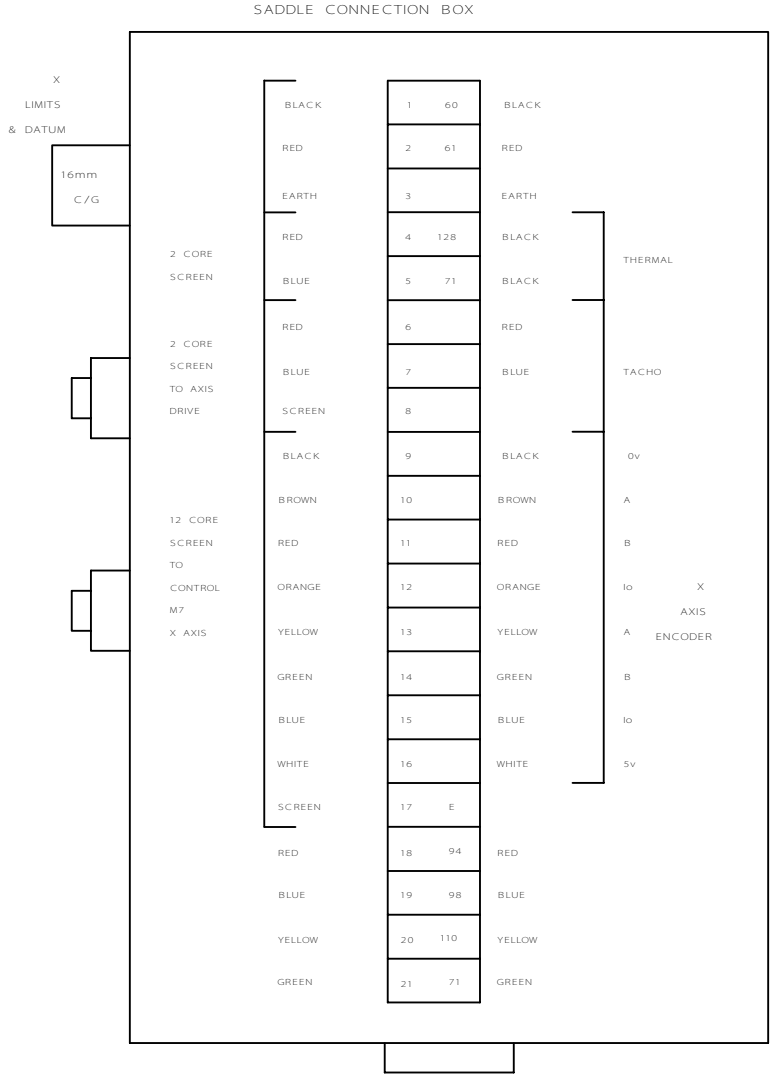

C/G = COMPRESSION GLAND

IF IN DOUBT ASK

CYCLONE 0T-A SADDLE AND HEADSTOCK CONNECTION BOXES

SHEET 12

[CYC-A]

[N12]

DENFORD MACHINE TOOLS LTD BRIGHOUSE WEST YORKSHIRE

DRN BY A McHENRY

DATE 29-9-93

A3- 310545 B

IF IN DOUBT ASK

PUSHBUTTON SIDE
FEMALE QM
MALE PINS

12 WAY QM

PANEL SIDE
MALE QM
FEMALE PINS

PIN	WIRE	COLOUR	
1	73	BLUE	4 CORE TO CP-3 → 1
2	72	RED	→ 2
3	74	YELLOW	→ 3
4	107	RED	2 CORE TO TERMINAL STRIP
5	94	BLUE	
9		RED	4 CORE TO M 12 → 4
10		BLUE	→ 3
11		GREEN	→ 8
12		YELLOW	→ 9

0.2mm SEPARATES TO PUSHBUTTONS

4 CORE TO HANDWHEEL

CONTROL ON P/B
(GREEN LENS)

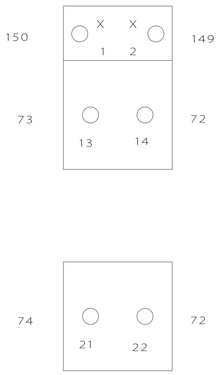

CONTROL OFF P/B
(RED LENS)

AIR PRESSURE REGULATOR

TAILSTOCK EXTEND P/B
(ORANGE LENS)

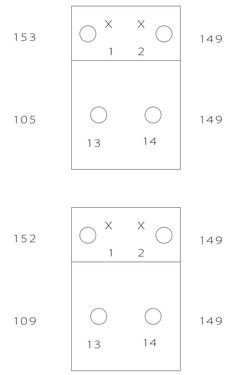

TAILSTOCK RETRACT P/B
(ORANGE LENS)

TOOL SELECT P/B
(GREEN LENS)

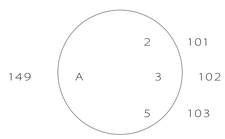

TOOL SELECT
ROTARY
SWITCH

DOOR OVERRIDE P/B
(ORANGE LENS)

HANDWHEEL

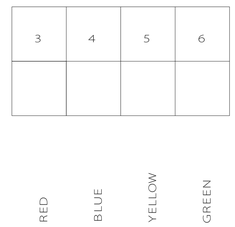

AXIS LIMIT
OVERRIDE P/B
(WHITE LENS)

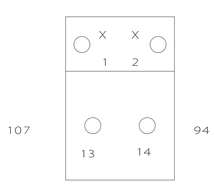

P/B ON RIGHT HAND SIDE OF OPERATORS PANEL

WIRES FROM M1 B

WIRE	COLOUR
100	BLACK
101	RED
102	BROWN
103	WHITE
104	GREY
105	ORANGE
106	YELLOW
107	GREEN
108	BLUE
109	VIOLET
149	PINK

WIRES FROM M2 B

WIRE	COLOUR
150	GREY/BLUE
151	WHITE/BLACK
152	RED/BLACK
153	WHITE/BLACK

CYCLONE 0T-A
OPERATORS PANEL
WIRING
DIAGRAM

SHEET 13
[CYC-A]
[N13]

DENFORD MACHINE TOOLS LTD BRIGHOUSE WEST YORKSHIRE

DRN BY A McHENRY

DATE 29-9-93

A3- 310533 A

DENFORD MACHINE TOOLS LTD BRIGHOUSE WEST YORKSHIRE

MAIN PCB
M1 50 WAY
HONDA FEMALE

OPERATORS PANEL
M1A 50 WAY
FEMALE

8 CORE
SCREEN

DESCRIPTION	BIT No	PIN No		PIN No
	0v	1	BLACK	1
	0v	2	RED	2
	0v	3	YELLOW	3
	0v	4		4
KD 5	X20.5	5	BLACK	5
DOOR OVERRIDE P/B	X16.7	6	BROWN	6
	X17.7	7	RED	7
	X18.7	8	ORANGE	8
TOOL SELECT BIT 1	X17.1	9	YELLOW	9
TOOL SELECT BIT 0	X17.0	10	GREEN	10
QUILL EXTEND P/B	X16.1	11	BLUE	11
SWARF CONV. RUN P/B	X16.0	12	VIOLET	12
KD 7	X20.7	13	GREY	13
KD 4	X20.4	14	WHITE	14
KD 3	X20.3	15	PINK	15
KD 2	X20.2	16	TURQUOISE	16
KD 1	X20.1	17	RED/BLUE	17
KD 0	X20.0	18	GREEN/RED	18
E-STOP MONITOR	X21.4	19	RED/BLACK	19
SWARF CONV. STOP P/B	X16.3	20	WHITE/RED	20
QUILL RETRACT P/B	X16.2	21	YELLOW/BROWN	21
TOOL SELECT P/B	X17.3	22	YELLOW/VIOLET	22
TOOL SELECT BIT 0	X17.2	23	WHITE/VIOLET	23
	X18.3	24		24
	X18.2	25		25

97

ESR

70 0v

36 CORE
CUT OUT

GREY/BROWN
GREY/GREEN
RED/BROWN

IF IN DOUBT ASK

DRN BY A McHENRY

DATE 29-9-93

A3- 310521 A

CYCLONE OT-A
M1 TO M1A
INPUTS
(1-25)

[N14]

[CYC-A]

SHEET 14

DENFORD MACHINE TOOLS LTD BRIGHOUSE WEST YORKSHIRE

DRN BY A McHENRY

DATE 29-9-93

A3- 310521 A

MAIN PCB
M1 50 WAY
HONDA FEMALE

OPERATORS PANEL
M1A 50 WAY
FEMALE

DESCRIPTION	BIT No	PIN No		PIN No
	X21.6	26		26
RSV 1	X21.5	27	WHITE/BROWN	27
		28		28
	+24v	29	LINK	29
	+24v	30	GREEN	30
	+24v	31	BLUE	31
	+24v	32	WHITE	32
* OV 8	X21.3	33	YELLOW/BLUE	33
* OV 4	X21.2	34	WHITE/BLUE	34
* OV 2	X21.1	35	BLUE/BLACK	35
* OV 1	X21.0	36	ORANGE/BLUE	36
KD 6	X20.6	37	YELLOW/GREEN	37
X DATUM SWITCH	X16.5	38	110 RED	38
Z DATUM SWITCH	X17.5	39	111 BLUE	39
	X18.5	40		40
KEY	X21.7	41	WHITE/GREEN	41
KST	X22.7	42	ORANGE/GREEN	42
	X22.6	43		43
RSV 3	X22.5	44	GREEN/BLUE	44
RSV 2	X22.4	45	GREY/BLUE	45
KA 3	X22.3	46	GREEN/BLACK	46
KA 2	X22.2	47	VIOLET/BLACK	47
KA 1	X22.1	48	BROWN/BLACK	48
KA 0	X22.0	49	YELLOW/RED	49
		50		50

8 CORE
SCREEN

111 Z
110 X
71 +24v

36 CORE
CUT OUT

GREY/BROWN
GREY/GREEN
RED/BROWN

CYLONE 0T-A
M1 TO M1A
INPUTS
(26-50)

[N15] [CYC-A] SHEET 15

IF IN DOUBT ASK

FANUC OPERATORS PANEL

TO PUSHBUTTONS

M1B 50 WAY HONDA PLUG

PC DESCRIPTION	ADDRESS + BIT No	PIN No
	0v	1
	0v	2
	0v	3
	0v	4
KD 5	X20.5	5
DOOR OVERRIDE P/B	X16.7	6
	X17.7	7
	X18.7	8
TOOL SELECT BIT 1	X17.1	9
TOOL SELECT BIT 0	X17.0	10
QUILL EXTEND P/B	X16.1	11
SWARF CONV. RUN P/B	X16.0	12
KD 7	X20.7	13
KD 4	X20.4	14
KD 3	X20.3	15
KD 2	X20.2	16
KD 1	X20.1	17
KD 0	X20.0	18
E-STOP MONITOR	X21.4	19
SWARF CONV. STOP P/B	X16.3	20
QUILL RETRACT P/B	X16.2	21
TOOL SELECT P/B	X17.3	22
TOOL SELECT BIT 2	X17.2	23
	X18.3	24
	X18.2	25
		26
		27
		28
		29
	+24v	30
	+24v	31
	+24v	32

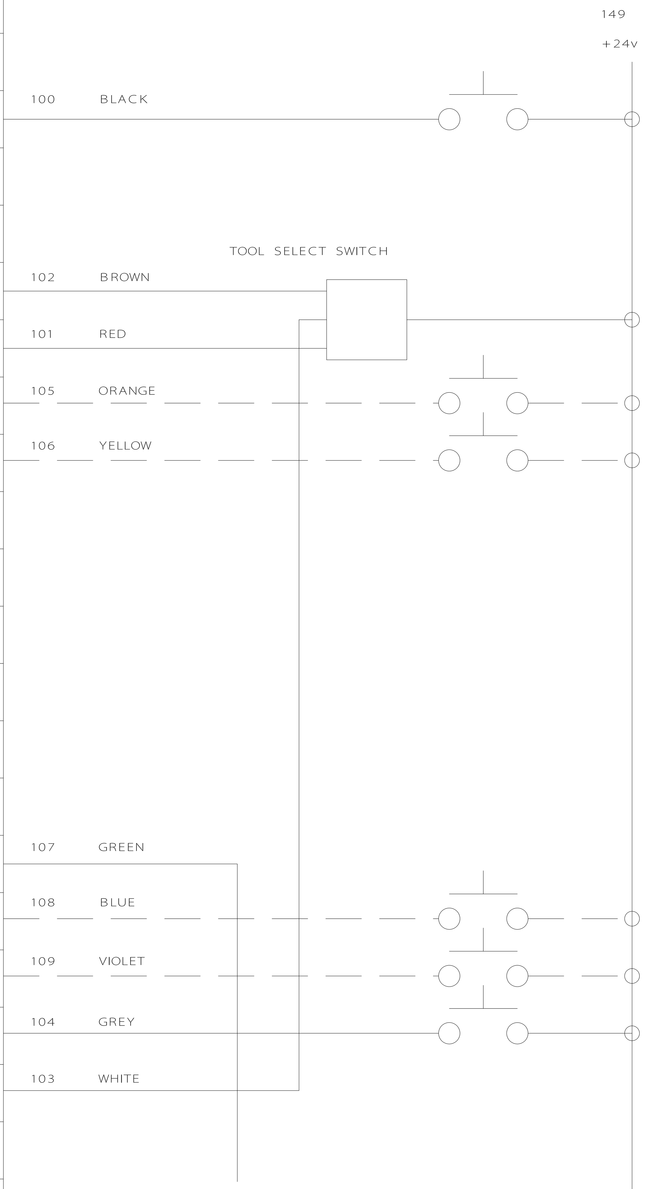

PINS 26-29

AND 33-50

ARE NOT USED

IF IN DOUBT ASK

DENFORD MACHINE TOOLS LTD BRIGHOUSE WEST YORKSHIRE

DRN BY A McHENRY

DATE 29-9-93

A3- 310522 A

CYCLONE 0T-A

M1B

PUSHBUTTON

INPUTS

[N16]

[CYC-A]

SHEET 16

DENFORD MACHINE TOOLS LTD BRIGHOUSE WEST YORKSHIRE

DRN BY A McHENRY

DATE 29-9-93

A3- 310523 B

CYCLONE OT-A
M2 TO M2A
OUTPUTS
(1-25)

[N17] [CYC-A] SHEET 17

IF IN DOUBT ASK

M2 MAIN PCB
50 WAY HONDA FEMALE

M2A OPERATORS PANEL
50 WAY HONDA FEMALE

DESCRIPTION	BIT No	PIN		PIN
	0v	1	BLACK	1
	0v	2	BROWN	2
	0v	3	RED	3
	0v	4		4
	Y48.7	5		5
	Y48.6	6		6
	Y48.5	7		7
	Y48.4	8		8
	Y49.7	9		9
	Y50.5	10		10
	Y52.7	11		11
	Y52.6	12		12
	Y52.5	13		13
	Y52.4	14		14
CONTROL ON LAMP	Y52.3	15	ORANGE	15
SWARF CONV. ON LAMP	Y52.2	16	YELLOW	16
QUILL RETRACT LAMP	Y52.1	17	GREEN	17
QUILL EXTEND LAMP	Y52.0	18	BLUE	18
	Y50.2	19	WHITE/BLUE	19
	Y50.3	20	BLACK *	20
SWARF CONV. REVERSE RELAY	Y50.0	21	155 BROWN *	21
QUILL EXTEND RELAY	Y49.3	22	156 RED *	22
AUXILIARY OUTPUT 1	Y49.1	23	157 ORANGE *	23
	Y49.0	24	YELLOW *	24
TOOLPOST REVERSE RELAY	Y48.0	25	159 GREEN *	25

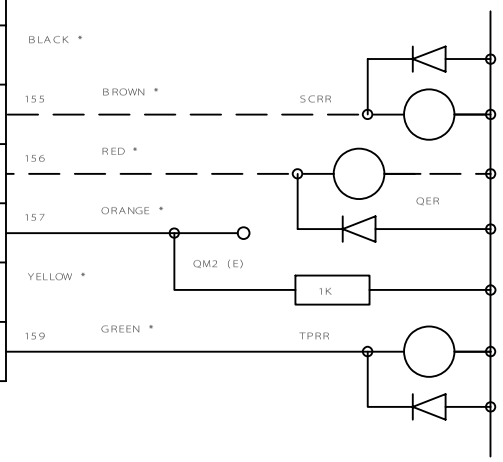

2 20 CORE CABLES
1 TO OPERATORS PANEL
CUT OUT
RED/BLUE
GREEN/RED
RED/BROWN
YELLOW/BLUE

*2 TO RELAYS
CUT OUT
PINK
TURQUOISE
RED/BROWN
YELLOW/BLUE

DENFORD MACHINE TOOLS LTD BRIGHOUSE WEST YORKSHIRE

DRN BY A McHENRY

DATE 29-9-93

A3 - 310523 B

M2 MAIN PCB

50 WAY HONDA FEMALE

M2A OPERATORS PANEL

50 WAY HONDA MALE

DESCRIPTION	BIT No	PIN			PIN
COOLANT ON RELAY	Y48.1	26	160	BLUE *	26
CHUCK OPEN RELAY	Y48.2	27	161	VIOLET *	27
		28			28
		29			29
		30			30
		31			31
		32			32
LD 7	Y51.7	33		VIOLET	33
LD 6	Y51.6	34		GREY	34
LD 5	Y51.5	35		WHITE	35
LD 4	Y51.4	36		PINK	36
LD 3	Y51.3	37		TURQUOISE	37
LD 2	Y51.2	38		WHITE/RED	38
LD 1	Y51.1	39		YELLOW/RED	39
LD 0	Y51.0	40		RED/BLACK	40
QUILL RETRACT RELAY	Y49.4	41	162	GREY *	41
AUXILIARY OUTPUT 2	Y53.7	42	163	WHITE *	42
COOLANT B RELAY	Y53.6	43		GREEN/RED *	43
TOOLPOST FORWARD RELAY	Y53.5	44	165	WHITE/RED *	44
TOOLPOST BRAKE RELAY	Y53.4	45	166	RED/BLUE *	45
SWARF CONV. FORWARD RELAY	Y53.3	46		RED/BLACK *	46
CHUCK CLOSE RELAY	Y53.2	47	168	WHITE/BLUE *	47
AXIS LUBE RELAY	Y53.1	48	169	YELLOW/RED *	48
	Y53.0	49			49
		50			50

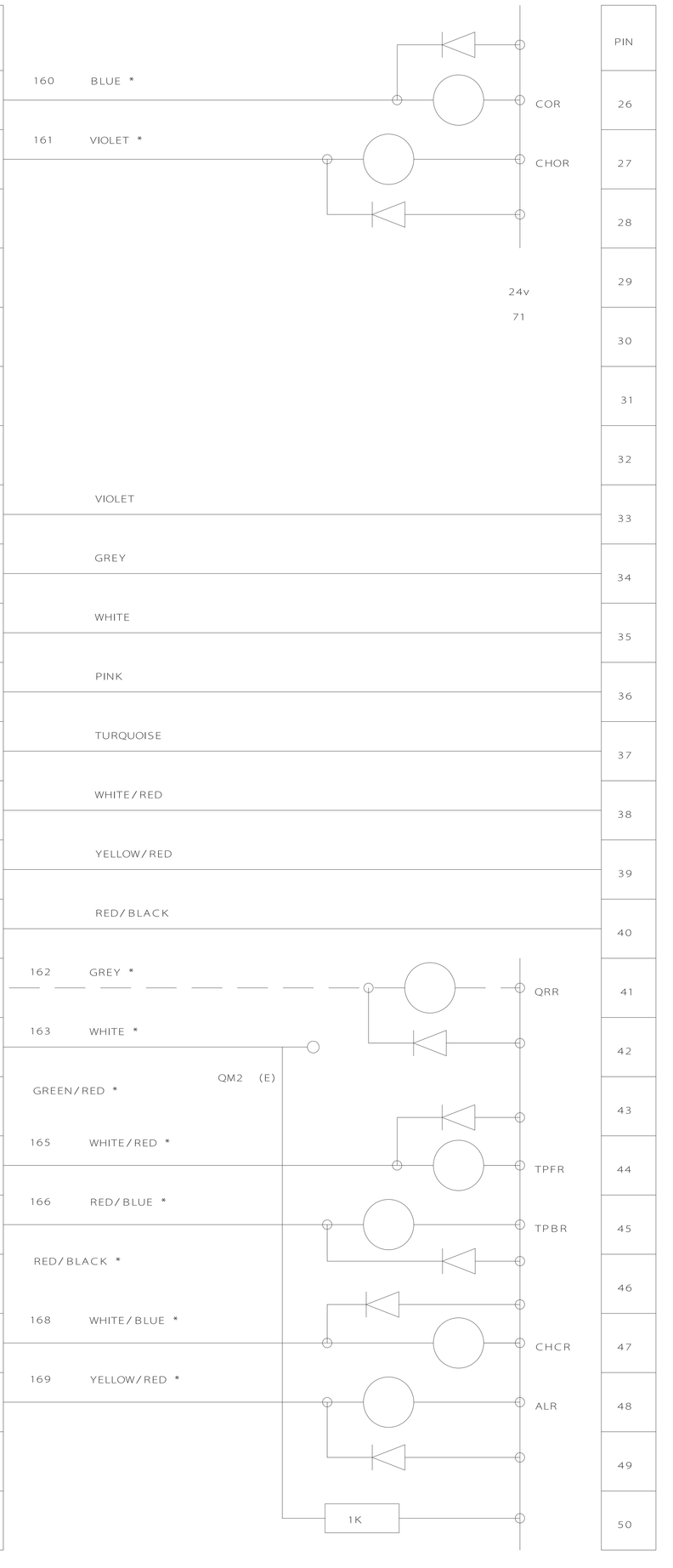

2 20 CORE CABLES

1 TO OPERATORS PANEL

CUT OUT

RED/BLUE

GREEN/RED

RED/BROWN

YELLOW/BLUE

*2 TO RELAYS

CUT OUT

PINK

TURQUOISE

RED/BROWN

YELLOW/BLUE

CYCLONE 0T-A

M2 TO M2A

OUTPUTS

(26-50)

[N18]

[CYC-A]

SHEET 18

IF IN DOUBT ASK

M2B MAIN PCB

50 WAY HONDA FEMALE

DESCRIPTION	BIT No	PIN
	0v	1
	0v	2
	0v	3
	0v	4
	Y48.7	5
	Y48.6	6
	Y48.5	7
	Y48.4	8
	Y49.7	9
	Y50.5	10
	Y52.7	11
	Y52.6	12
	Y52.5	13
	Y52.4	14
CONTROL ON LAMP	Y52.3	15
SWARF CONV. ON LAMP	Y52.2	16
QUILL RETRACT LAMP	Y52.1	17
QUILL EXTEND LAMP	Y52.0	18
	Y50.2	19
	Y50.3	20
SWARF CONV. REVERSE RELAY	Y50.0	21
QUILL EXTEND RELAY	Y49.3	22
AUXILIARY OUTPUT 1	Y49.1	23
	Y49.0	24
TOOLPOST REVERSE RELAY	Y48.0	25

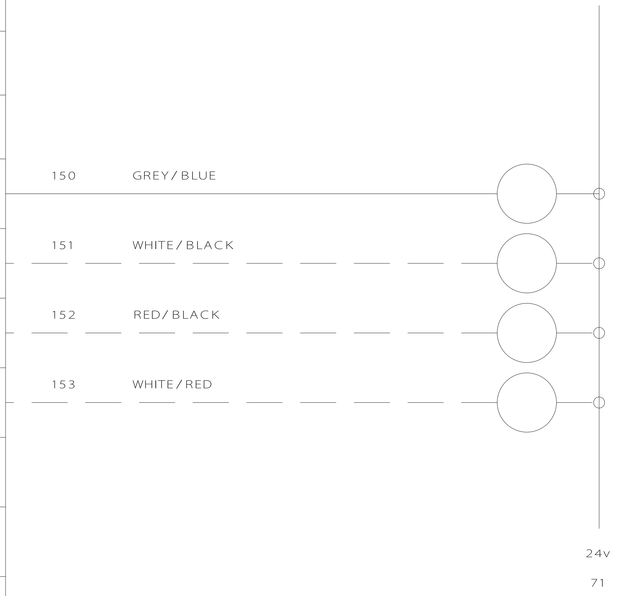

PINS 26 TO 50

NOT USED

0.5mm SEPARATE WIRES

IF IN DOUBT ASK

DENFORD MACHINE TOOLS LTD BRIGHOUSE WEST YORKSHIRE

DRN BY A McHENRY

DATE 29-9-93

A3- 310524 A

CYCLONE OT-A

M2B OUTPUTS

SHEET 19

[CYC-A]

[N19]

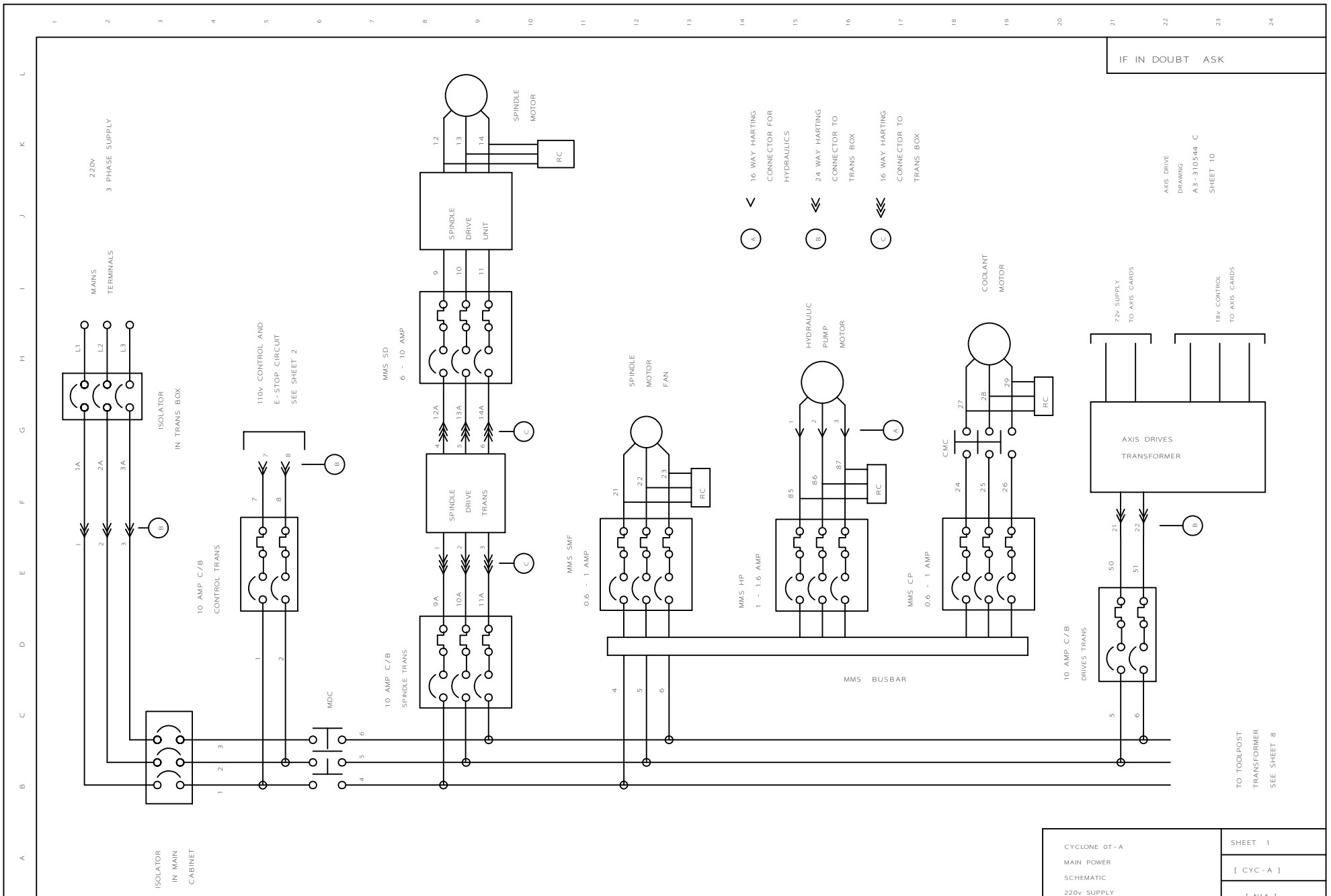
IF IN DOUBT ASK
220v
3 PHASE SUPPLY
MAINS
TERMINALS
L1
L2
L3
ISOLATOR
IN TRANS BOX
1A
2A
3A
ISOLATOR
IN MAIN
CABINET
10 AMP C/B
CONTROL TRANS
110v CONTROL AND
E-STOP CIRCUIT
SEE SHEET 2
MDC
10 AMP C/B
SPINDLE TRANS
MMS SD
6 - 10 AMP
SPINDLE
DRIVE
TRANS
SPINDLE
DRIVE
UNIT
SPINDLE
MOTOR
RC
MMS SMF
0.6 - 1 AMP
SPINDLE
MOTOR
FAN
MMS HP
1 - 1.6 AMP
HYDRAULIC
PUMP
MOTOR
MMS CP
0.6 - 1 AMP
CMC
COOLANT
MOTOR
MMS BUSBAR
16 WAY HARTING
CONNECTOR FOR
HYDRAULICS
24 WAY HARTING
CONNECTOR TO
TRANS BOX
16 WAY HARTING
CONNECTOR TO
TRANS BOX
AXIS DRIVE
DRAWING
A3-310544 C
SHEET 10
72v SUPPLY
TO AXIS CARDS
18v CONTROL
TO AXIS CARDS
AXIS DRIVES
TRANSFORMER
10 AMP C/B
DRIVES TRANS
TO TOOLPOST
TRANSFORMER
SEE SHEET 8
CYCLONE 0T-A
MAIN POWER
SCHEMATIC
220v SUPPLY
SHEET 1
[CYC-A]
[N1A]
DENFORD MACHINE TOOLS LTD BRIGHOUSE WEST YORKSHIRE
DRN BY A McHENRY
DATE 2-9-93
A3- 310540 G

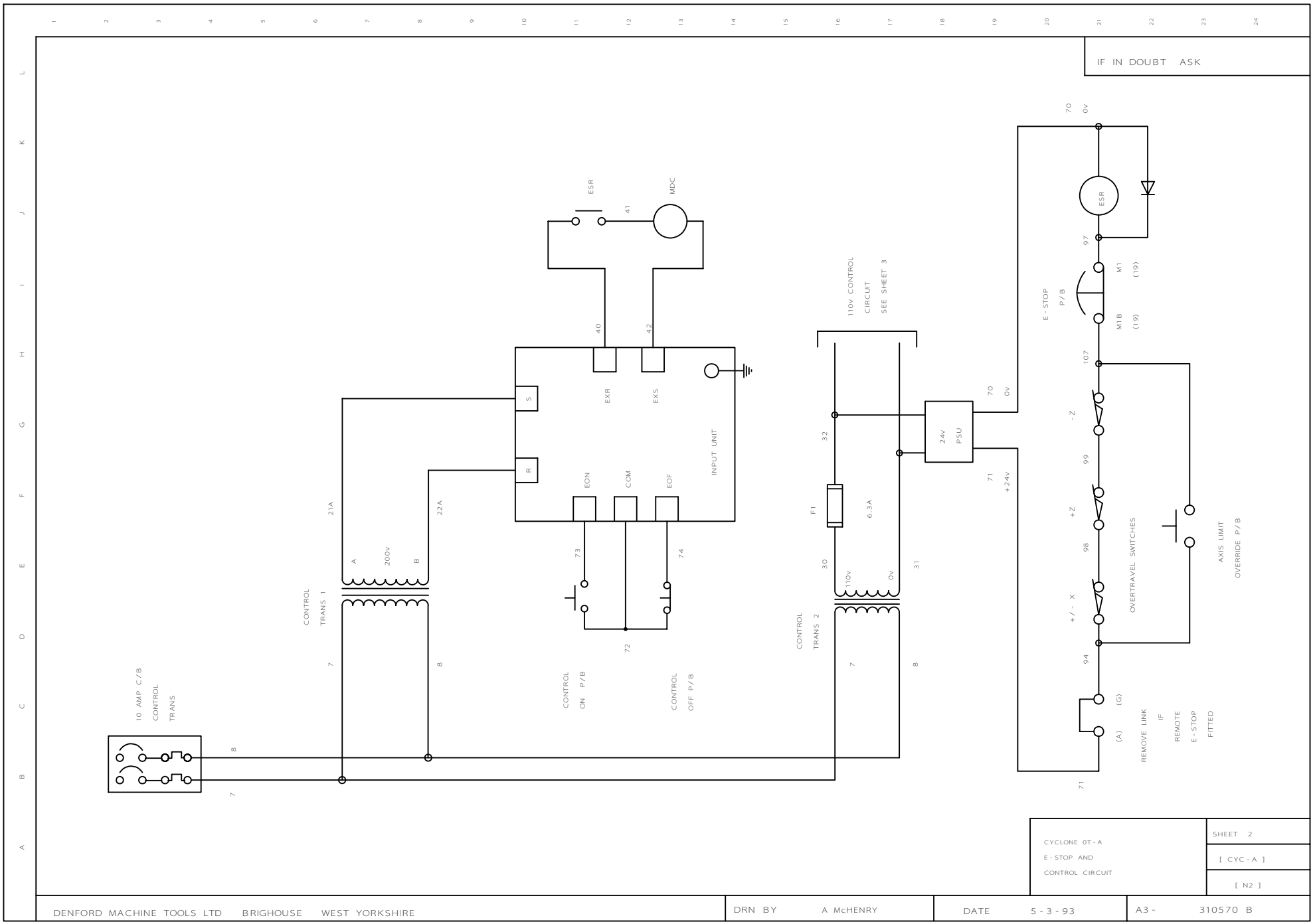
IF IN DOUBT ASK
ESR
MDC
41
40
42
EXR
EXS
S
R
INPUT UNIT
EON
COM
EOF
73
74
72
21A
22A
A
200v
B
CONTROL TRANS 1
7
8
CONTROL ON P/B
CONTROL OFF P/B
10 AMP C/B
CONTROL TRANS
8
7
110v CONTROL CIRCUIT SEE SHEET 3
32
30
110v
0v
31
F1
6.3A
CONTROL TRANS 2
7
8
24v PSU
70
0v
71
+24v
70
0v
ESR
97
E-STOP P/B
M1
(19)
M1B
(19)
107
-Z
99
+Z
98
+/- X
94
OVERTRAVEL SWITCHES
AXIS LIMIT OVERRIDE P/B
(G)
(A)
REMOVE LINK IF REMOTE E-STOP FITTED
71
CYCLONE 0T-A
E-STOP AND
CONTROL CIRCUIT
SHEET 2
[CYC-A]
[N2]
DENFORD MACHINE TOOLS LTD BRIGHOUSE WEST YORKSHIRE
DRN BY A McHENRY
DATE 5-3-93
A3- 310570 B

DENFORD MACHINE TOOLS LTD BRIGHOUSE WEST YORKSHIRE

M3

(CONTROL)
20 WAY FEMALE
CONNECTOR

KM1

(MONITOR UNIT)
20 WAY MALE
CONNECTOR

DESCRIPTION	PIN No		PIN No	DESCRIPTION
	1		1	
KCM0 - 0	2	BLACK	2	KCM0 - 0
KCM0 - 1	3	BROWN	3	KCM0 - 1
SW0 - 6	4	RED	4	SW0 - 6
SW0 - 4	5	ORANGE	5	SW0 - 4
SW0 - 2	6	YELLOW	6	SW0 - 2
SW0 - 0	7	GREEN	7	SW0 - 0
KCM0 - 2	8	BLUE	8	KCM0 - 2
KCM0 - 3	9	MAUVE	9	KCM0 - 3
SW0 - 7	10	GREY	10	SW0 - 7
SW0 - 5	11	WHITE	11	SW0 - 5
SW0 - 3	12	PINK	12	SW0 - 3
SW0 - 1	13	LIGHT BLUE	13	SW0 - 1
KCM0 - 4	14	WHITE/BLUE	14	KCM0 - 4
KCM0 - 5	15	YELLOW/BLUE	15	KCM0 - 5
KCM0 - 6	16	RED/BROWN	16	KCM0 - 6
KCM0 - 7	17	BLACK/RED	17	KCM0 - 7
	18		18	
	19		19	
	20		20	

20 CORE SCREEN
CUT OUT
YELLOW/RED
WHITE/RED
RED/BLUE
GREEN/RED

SCREEN AT CONTROL SIDE

IF IN DOUBT ASK

DRN BY A McHENRY

DATE 29-9-93

A3- 310006 A

CYCLONE 0T-A
CONTROL TO KEYPAD
SIGNALS
M3 - KM1

[N20]

[CYC-A]

SHEET 20

IF IN DOUBT ASK

TERMINALS IN SADDLE
AND HEADSTOCK
CONNECTION BOXES
SEE SHEET 12

0v
5v
Io
Io
B
B
A
A

SIGNALS FROM
ENCODER

PIN No	SIGNAL	
1	0v	BLACK
2		
3		
4	+5V	WHITE
5		
6		
7		
8		LINK
9		
10		
11		
12		
13		
14	PC Z	ORANGE
15	* PC Z	BLUE
16	PC A	RED
17	* PC A	GREEN
18	PC B	BROWN
19	* PC B	YELLOW
20		

M7 X AXIS
M9 Z AXIS

(CONTROL)
20 WAY FEMALE
CONNECTOR

8 CORE SCREEN

CYCLONE 0T-A
M7, M9
AXIS ENCODER
SIGNALS

SHEET 21
[CYC-A]
[N21]

DENFORD MACHINE TOOLS LTD BRIGHOUSE WEST YORKSHIRE

DRN BY A McHENRY

DATE 29-9-93

A3- 310546 A

DENFORD MACHINE TOOLS LTD BRIGHOUSE WEST YORKSHIRE

CCX1

(CONTROL)
20 WAY FEMALE
CONNECTOR

SIGNAL	PIN
RVDO	1
HSYN	2
VSYN	3
GVDO	4
BVDO	5
	6
	7
0G	8
0v	9
0v	10
0G	11
	12
	13
	14
	15
	16
	17
	18
	19
	20

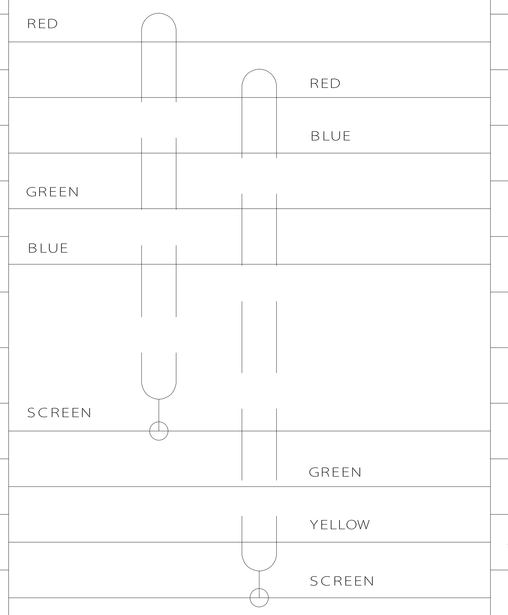

CN1

(MONITOR UNIT)
20 WAY MALE
CONNECTOR

PIN	SIGNAL
1	RVDO
2	HSYN
3	VSYN
4	GVDO
5	BVDO
6	
7	
8	0G
9	0v
10	0v
11	0G
12	
13	
14	
15	
16	
17	
18	
19	
20	

IF IN DOUBT ASK

DRN BY A McHENRY

DATE 29-9-93

A3 - 310038 A

CYCLONE OT-A
CCX1 TO CN1
VDU SIGNALS

SHEET 22

[CYC-A]

[N22]

IF IN DOUBT ASK

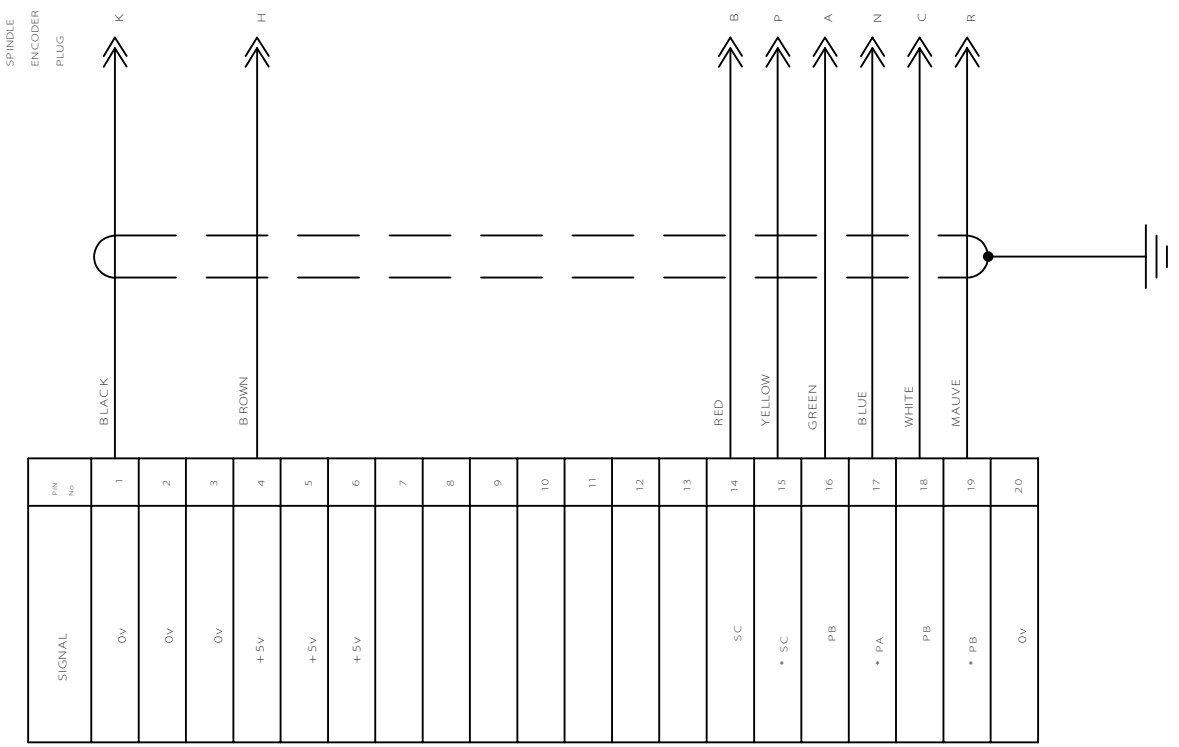

M11

(CONTROL)

20 WAY FEMALE CONNECTOR

CYCLONE 0T-A

SPINDLE ENCODER SIGNALS

M 11

SHEET 23

[CYC-A]

[N23]

DENFORD MACHINE TOOLS LTD BRIGHOUSE WEST YORKSHIRE

DRN BY A McHENRY

DATE 29-9-93

A3- 310009 A

2 3 4 5 6 7 8 9 10 11 12 13 14 15 16 17 18 19 20 21 22 23 24

IF IN DOUBT ASK

M12
HANDWHEEL
CONNECTOR

PIN	1	2	3	4	5	6	7	8	9	10	11	12	13	14	15	16	17	18	19	20
DESCRIPTION	0v	0v	0v	+5v	+5v	+5v		HA1	HB1											

CYCLONE 0T-A
M12 HANDWHEEL
CONNECTIONS

SHEET 24

[CYC-A]

[N24]

DENFORD MACHINE TOOLS LTD BRIGHOUSE WEST YORKSHIRE

DRN BY A McHENRY

DATE 29-9-93

A3- 310507 A

DENFORD MACHINE TOOLS LTD BRIGHOUSE WEST YORKSHIRE

DRN BY A McHENRY

DATE 29-9-93

A3- 310547 C

M18 CONTROL INPUTS

50 WAY FEMALE HONDA CONNECTOR

DESCRIPTION	BIT	PIN
	0v	1
	0v	2
	0v	3
	COM1	4
SPINDLE ALARM	X00.5	5
AIR PRESSURE SWITCH	X02.0	6
	X02.3	7
CHUCK OPEN FOOT SWITCH	X02.6	8
SPINDLE MOTOR THERMAL	X04.1	9
AUXILIARY INPUT 1	X04.4	10
	4NC	11
TOOLPOST POSITION BIT 3	X06.2	12
TOOLPOST THERMAL	X06.4	13
LUBE FLOAT SWITCH	X06.6	14
XAE	X08.0	15
+MITX	X08.2	16
+MITZ	X08.4	17
	X08.6	18
	X00.1	19
	X00.3	20
TOOLPOST CLAMPED	X00.6	21
DOOR CLOSED SWITCH	X02.1	22
CHUCK CLOSE FOOT SWITCH	X02.4	23
AUXILIARY INPUT 2	X02.7	24
EXTERNAL STOP	X04.2	25

LINK TO PINS 28 + 29

71 +24v

KEB FAULT CONTACT 22 23

112 BLACK

113 BROWN

RED

114 ORANGE QM1 (A) QM1 (C)

115 YELLOW

116 GREEN QM2 (C)

210 VIOLET QM3 (3)

240 GREY QM3 (15)

117 WHITE

PINK

TURQUOISE

RED/BLUE

RED/BROWN

216 YELLOW/RED QM3 (11)

118 WHITE/RED

119 RED/BLACK C01-(2) C01(3)

120 GREEN/RED QM2 (D)

121 YELLOW/BLUE BAR FEED L/S

PROBE ERROR SIGNAL

71 +24v

36 CORE SCREEN TO TERMINALS

ALL COLOURS USED

QM1 8 WAY SOCKET (FOOT SWITCH)

QM2 8 WAY SOCKET (AUXILIARIES)

QM3 24 WAY SOCKET (TOOLPOST - BARUFFALDI)

CYCLONE OT-A

M18 INPUTS (1-25)

BARUFFALDI TOE 80 TURRET

[N25] [CYC-A] SHEET 25

IF IN DOUBT ASK

M18 CONTROL INPUTS

50 WAY
FEMALE
HONDA
CONNECTOR

DESCRIPTION	BIT	PIN
DOOR OPEN SWITCH	X04.5	26
TOOLPOST POSITION BIT 1	X06.0	27
	COM2	28
	COM3	29
		30
		31
		32
	X00.0	33
X MOTOR THERMAL	X00.2	34
Z MOTOR THERMAL	X00.4	35
HYDRAULIC PRESSURE SWITCH A	X00.7	36
HYDRAULIC PRESSURE SWITCH B	X02.2	37
WORKSHIFT P/BUTTON	X02.5	38
DRIVE TRANS THERMAL	X04.0	39
CHUCK JAWS OPEN SENSOR	X04.3	40
CHUCK JAWS CLOSED SENSOR	X04.6	41
TOOLPOST POSITION BIT 2	X06.1	42
TOOLPOST POSITION BIT 4	X06.3	43
	X06.5	44
TOOLPOST STROBE SIGNAL	X06.7	45
ZAE	X08.1	46
-MITX	X08.3	47
-MITZ	X08.5	48
SKIP	X08.7	49
		50

LINK TO PINS 1+4

+24v
71

122 WHITE/BLUE

208 BLUE/BLACK — QM3 (1)

127 ORANGE/BLUE

128 YELLOW/GREEN

136 WHITE/GREEN

138 ORANGE/GREEN

GREEN/BLUE

SPINDLE BRAKE
THERMAL TRIP

123 GREY/BLUE — 140

124 GREEN/BLACK

125 GREY/GREEN

0v
70

209 YELLOW/BROWN — QM3 (2)

211 WHITE/BROWN — QM3 (4)

212 BROWN/BLACK

213 GREY/BROWN — QM3 (6)

YELLOW/VIOLET

VIOLET/BLACK

129 WHITE/VIOLET — PROBE INPUT

+24v
71

36 CORE SCREEN TO TERMINALS
ALL COLOURS ARE USED

QM1 8 WAY SOCKET (FOOT SWITCH)
QM2 8 WAY SOCKET (AUXILIARIES)
QM3 24 WAY SOCKET (TOOLPOST - BARUFFALDI)

IF IN DOUBT ASK

DENFORD MACHINE TOOLS LTD BRIGHOUSE WEST YORKSHIRE

DRN BY A McHENRY

DATE 29-9-93

A3- 310547 C

CYCLONE OT-A
M18 INPUTS (26-50)
BARUFFALDI TOE 80
TURRET

SHEET 26

[CYC-A]

[N26]

M19 20 WAY FEMALE
HONDA
CONNECTOR

DESCRIPTION	BIT No	PIN No
	Y80.0	1
SPINDLE FORWARD	Y80.1	2
SPINDLE REVERSE	Y80.2	3
	Y80.3	4
	Y80.4	5
	Y80.5	6
	Y80.6	7
	Y80.7	8
	Y82.0	9
DOOR OPEN RELAY	Y82.1	10
DOOR CLOSE RELAY	Y82.2	11
PARTS CATCHER EXTEND RELAY	Y82.3	12
SPINDLE BRAKE RELAY	Y82.4	13
	Y82.5	14
	Y82.6	15
	Y82.7	16
		17
	0v	18
	0v	19
		20

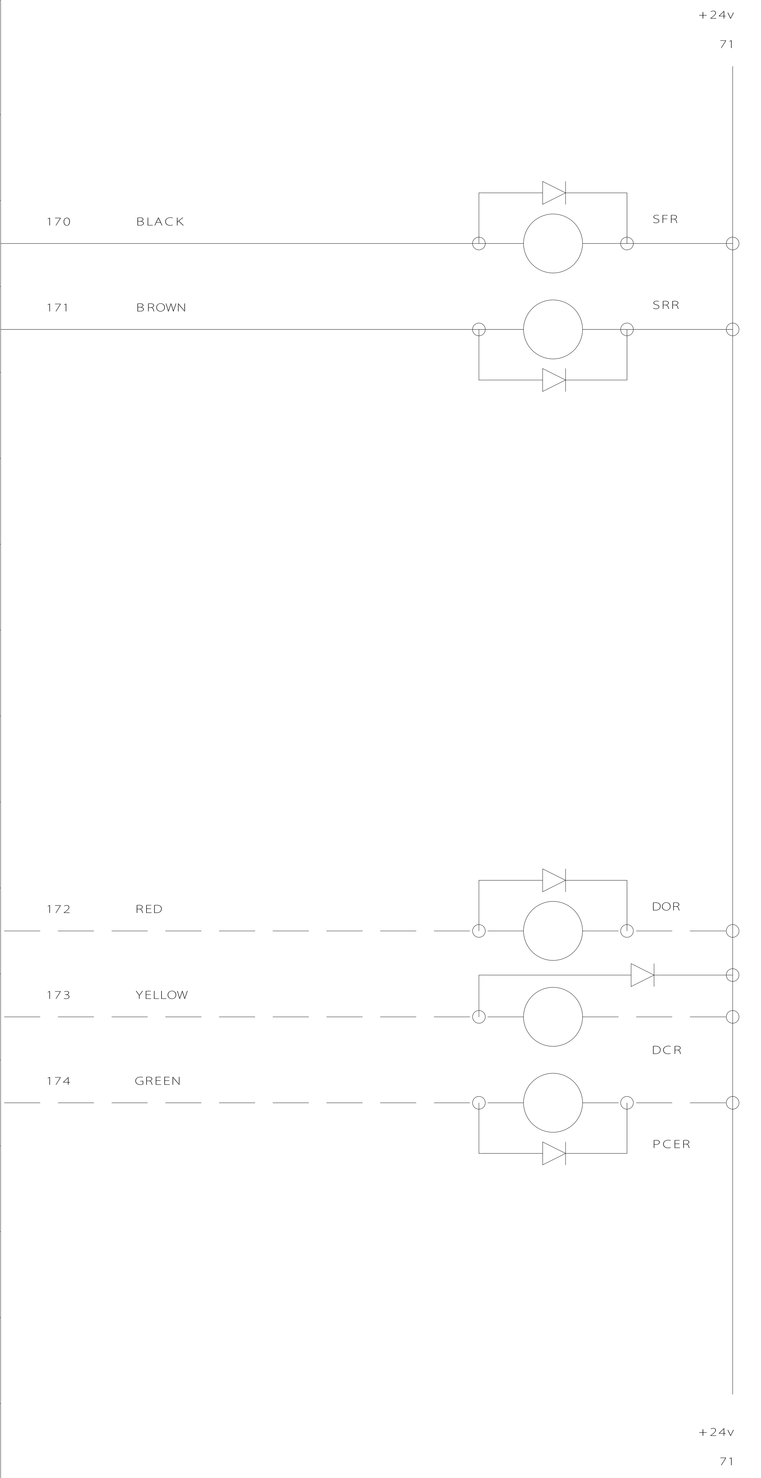

8 CORE SCREEN
CUT OUT
WHITE
VIOLET
BLUE

IF IN DOUBT ASK

DENFORD MACHINE TOOLS LTD BRIGHOUSE WEST YORKSHIRE

DRN BY A McHENRY

DATE 29-9-93

A3 - 310548 A

CYCLONE 0T-A
M19 OUTPUTS
BARUFFALDI TOE 80
TURRET

[N27]

[CYC-A]

SHEET 27

IF IN DOUBT ASK

CP 2
INPUT UNIT

PIN		PIN
1	BLACK	1
2	RED	2
3	YELLOW	3
4	GREEN	4
5	BLUE	5
6	WHITE	6

6 CORE 0.5mm SCREEN CABLE

CP 11
CONTROL PSU

1 — R
200v AC
2 — S
3 — GND
5 — PA
POWER READY
SIGNAL
6 — PB

INPUT UNIT
TO
CONTROL

POWER CONNECTOR

CP 15
CONTROL

PIN		PIN
1		1
2		2
3	YELLOW	3
4	GREEN	4
5	RED	5
6	BLUE	6

4 CORE 0.5mm SCREEN CABLE

CN 2
VDU

CONTROL
TO
VDU

POWER CONNECTOR

CYCLONE 0T-A
CONTROL AND VDU
POWER SUPPLY
CONNECTIONS

SHEET 28
[CYC-A]
[N28]

DENFORD MACHINE TOOLS LTD BRIGHOUSE WEST YORKSHIRE | DRN BY A McHENRY | DATE 29-9-93 | A3- 310580

IF IN DOUBT ASK

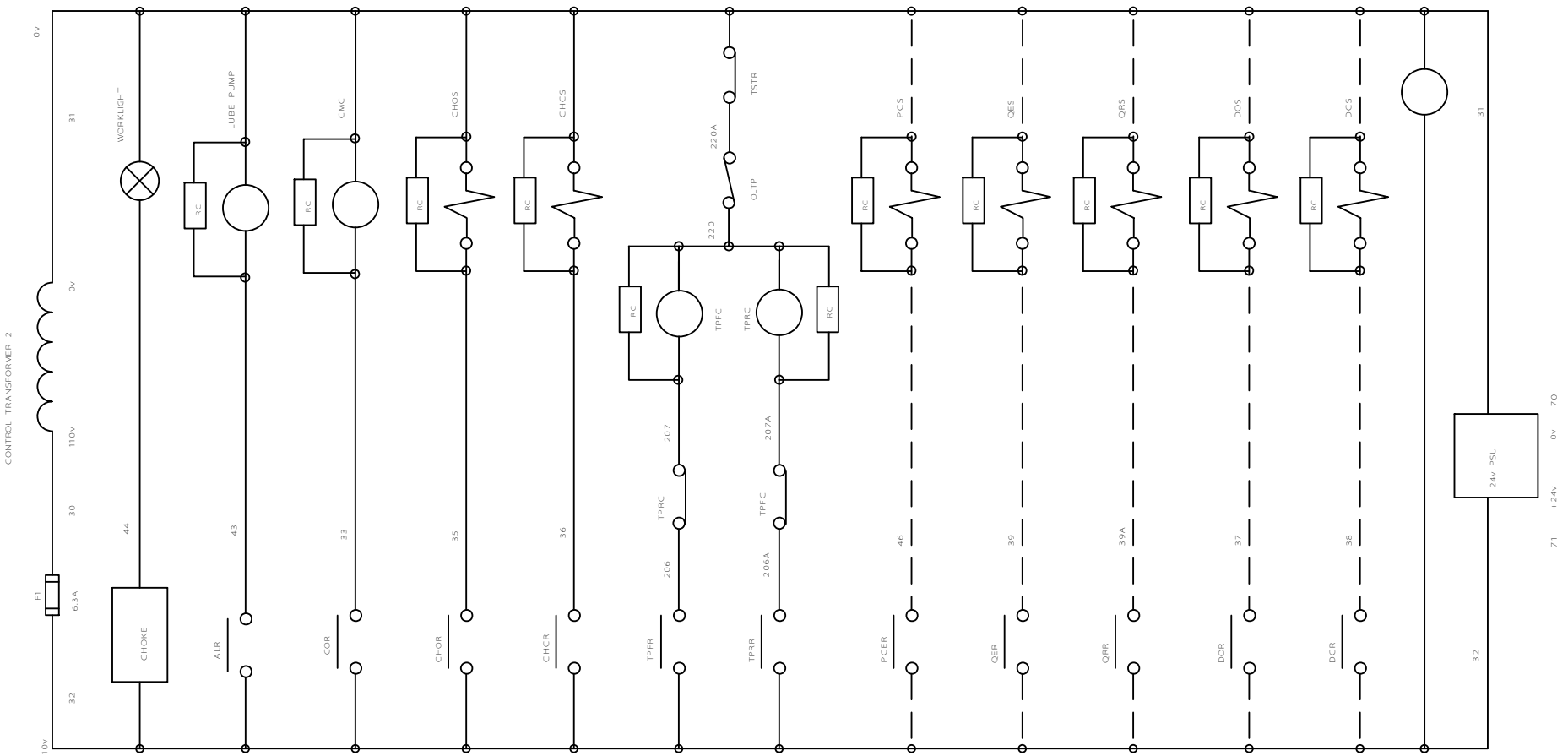

CYCLONE 0T-A
110v SCHEMATIC
BARUFFALDI
TOE 80 TURRET

SHEET 3
[CYC-A]
[N3]

DENFORD MACHINE TOOLS LTD BRIGHOUSE WEST YORKSHIRE

DRN BY A McHENRY

DATE 4-3-93

A3- 310541 C

IF IN DOUBT ASK

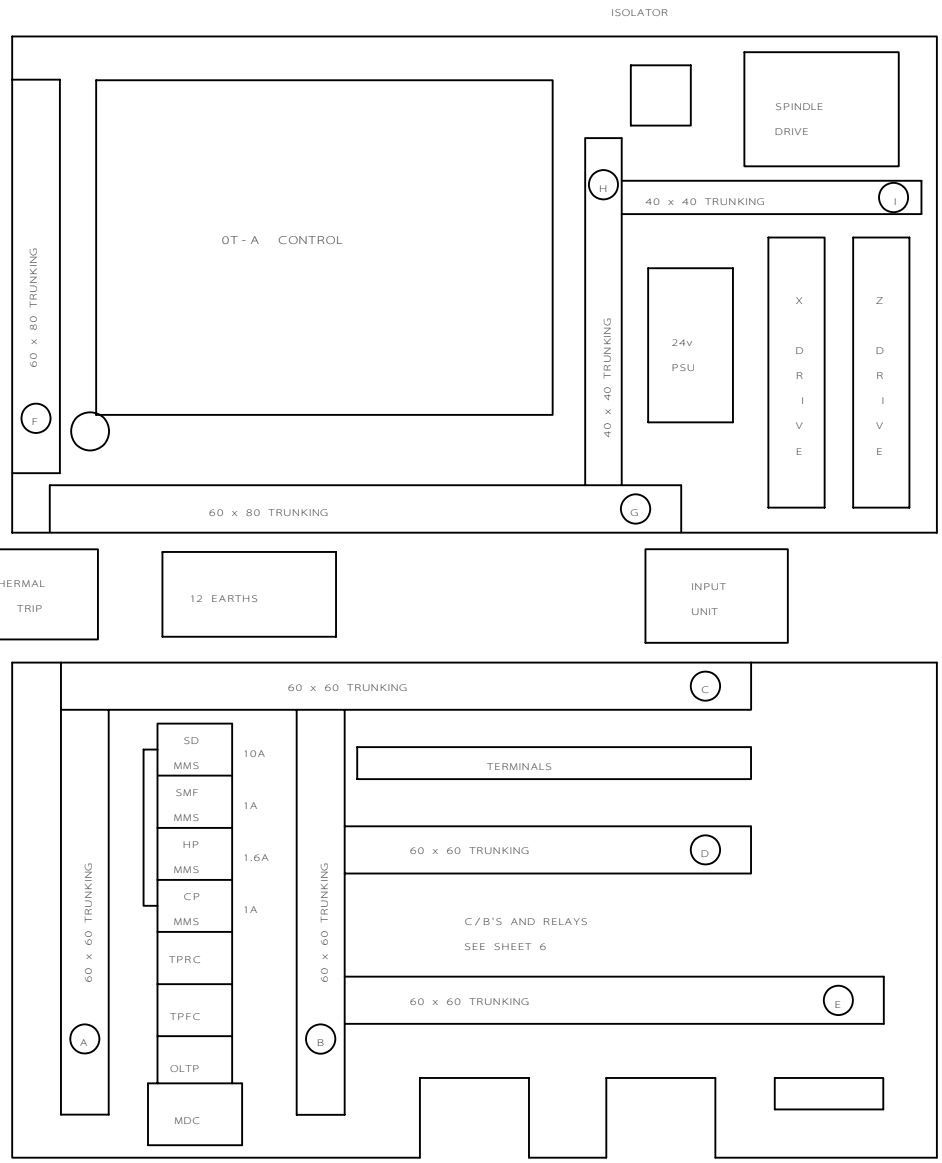

COMPONENTS ON BOTTOM OF CABINET

QM 1 8 WAY ROUND CONNECTOR
(FOOTSWITCH)

A	114
B	119
C	71
H	E

QM 2 8 WAY ROUND CONNECTOR
(AUXILIARIES)

A	71
B	70
C	116
D	120
E	157
F	163
G	94
H	E

CYLONE 0T - A
ELECTRICAL
CABINET LAYOUT
415v SUPPLY

SHEET 4
[CYC - A]
[N4]

DENFORD MACHINE TOOLS LTD BRIGHOUSE WEST YORKSHIRE

DRN BY A McHENRY

DATE 10 - 5 - 93

A3 - 310576

2 3 4 5 6 7 8 9 10 11 12 13 14 15 16 17 18 19 20 21 22 23 24

IF IN DOUBT ASK

ISOLATOR

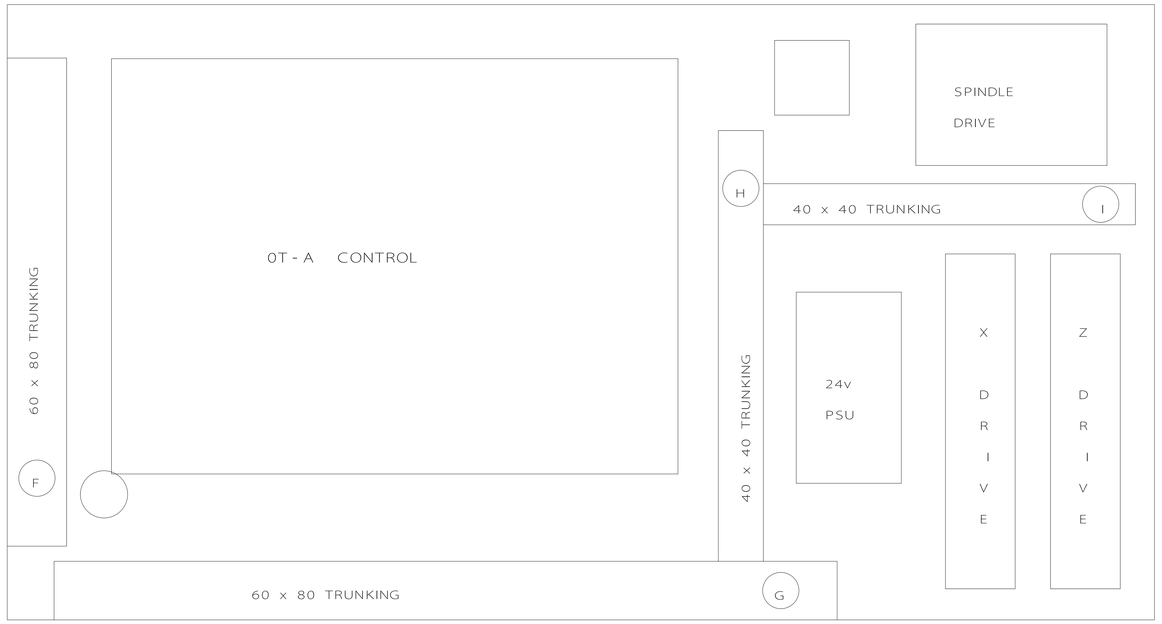

COMPONENTS
ON BOTTOM OF
CABINET

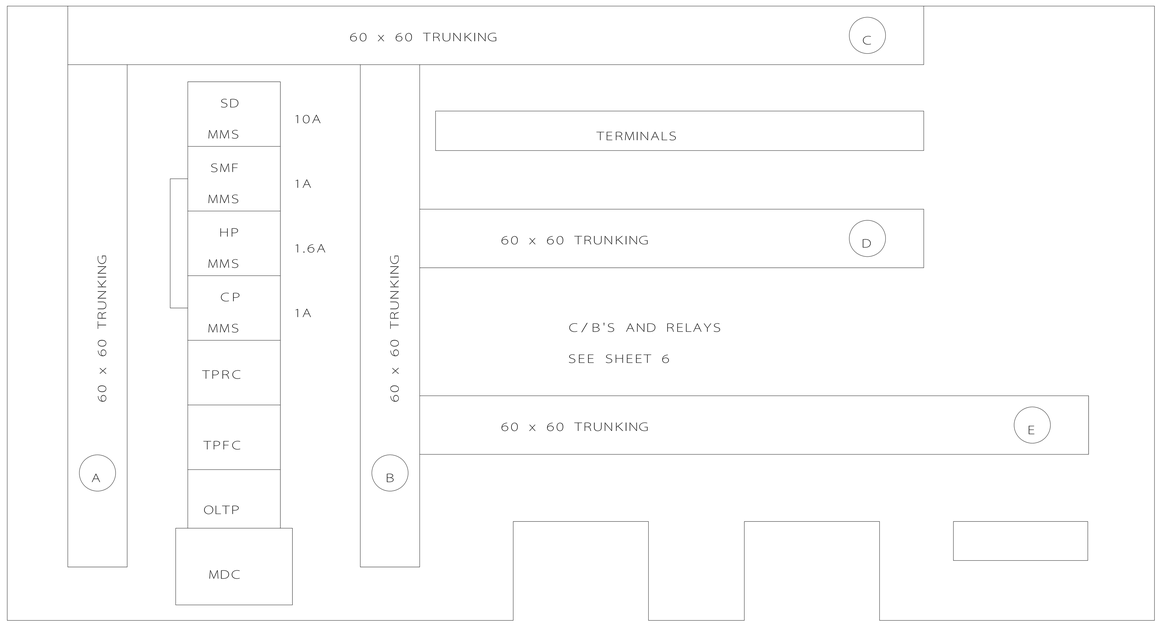

QM 1 8 WAY ROUND CONNECTOR
(FOOTSWITCH)

A	114
B	119
C	71
H	E

QM 2 8 WAY ROUND CONNECTOR
(AUXILIARIES)

A	71
B	70
C	116
D	120
E	157
F	163
G	94
H	E

CYLONE 0T - A
ELECTRICAL
CABINET LAYOUT
220v SUPPLY

SHEET 4

[CYC - A]

[N4A]

DENFORD MACHINE TOOLS LTD BRIGHOUSE WEST YORKSHIRE

DRN BY A McHENRY

DATE 10 - 5 - 93

A3 - 310576 A

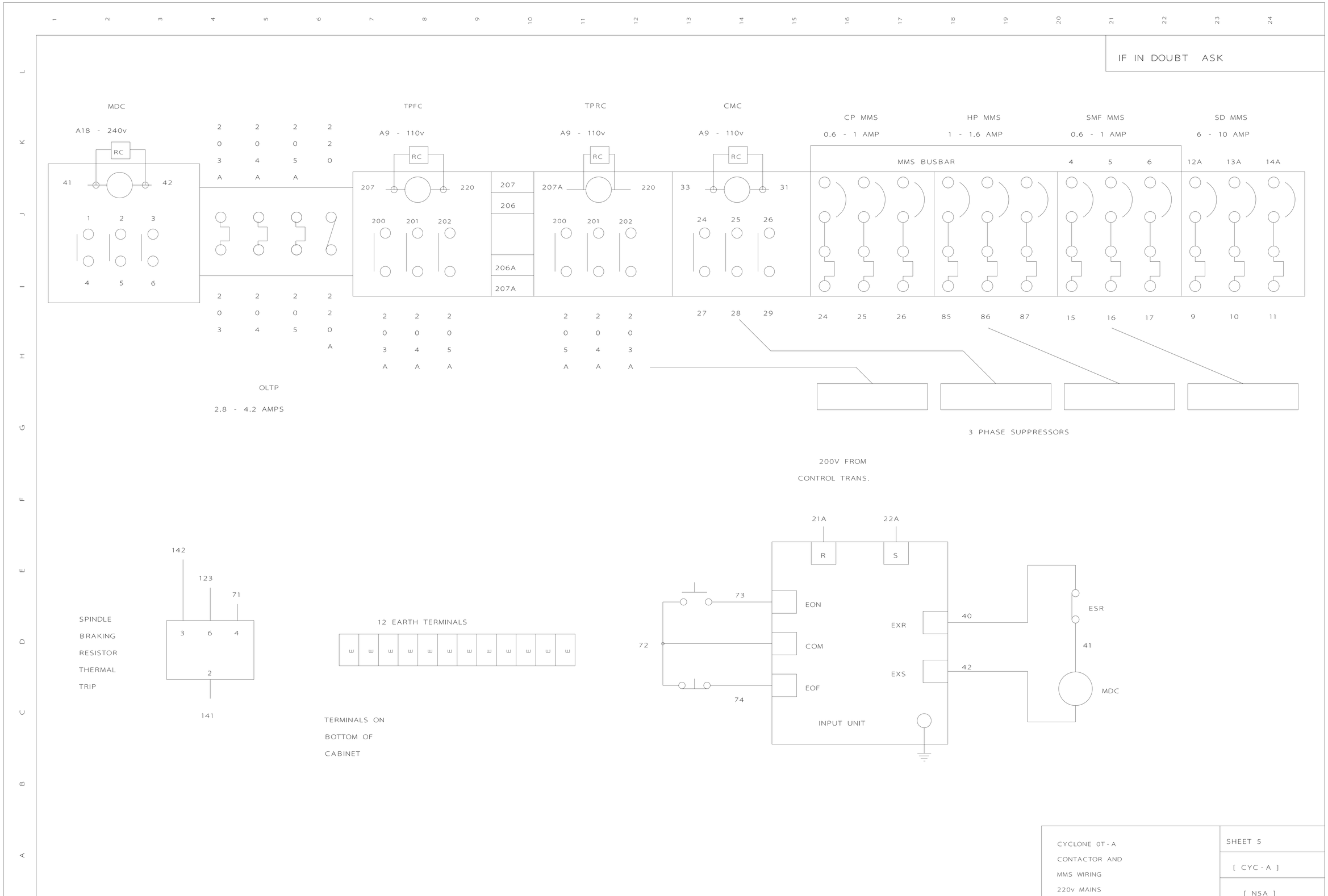

CYCLONE 0T-A
CONTACTOR AND
MMS WIRING
220v MAINS

SHEET 5

[CYC-A]

[N5A]

DENFORD MACHINE TOOLS LTD BRIGHOUSE WEST YORKSHIRE

DRN BY A McHENRY

DATE 28-9-93

A3- 310577 A

IF IN DOUBT ASK

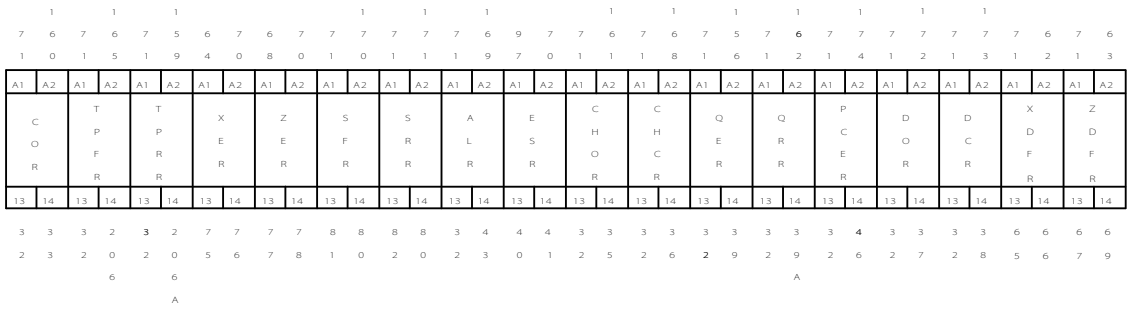

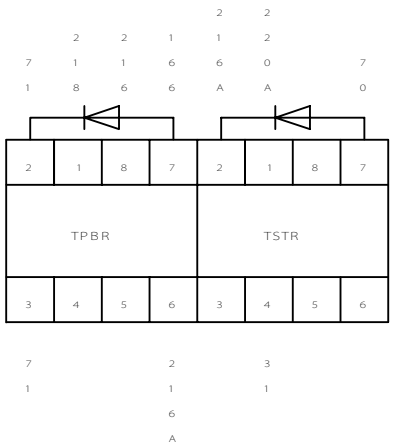

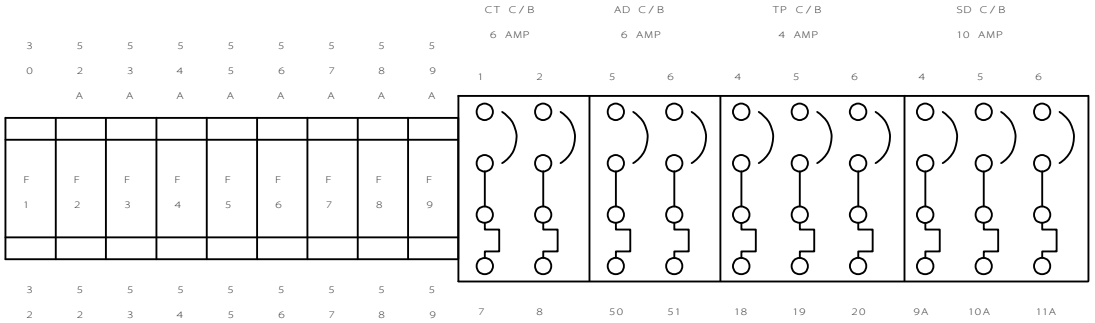

F1	110v CONTROL	6.3 A
F2	X AXIS 72v POWER	10 A
F3	X AXIS 72v POWER	10 A
F4	Z AXIS 72v POWER	10 A
F5	Z AXIS 72v POWER	10 A
F6	X AXIS 18v CONTROL	3.15 A
F7	X AXIS 18v CONTROL	3.15 A
F8	Z AXIS 18v CONTROL	3.15 A
F9	Z AXIS 18v CONTROL	3.15 A

ALL FUSES ARE T TYPE

95 TERMINALS AND 4 EARTHS

LINK (0.5mm GREY)

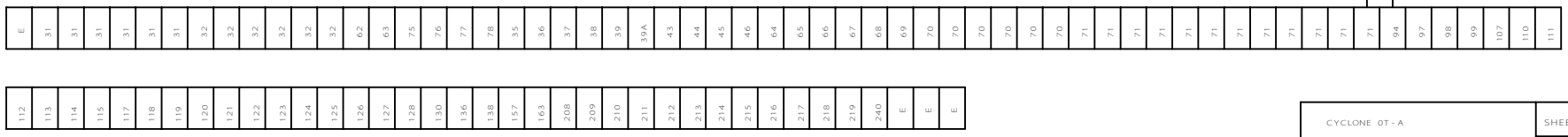

CYCLONE 0T-A
RELAY WIRING
DIAGRAM
220v SUPPLY

SHEET 6
[CYC-A]
[N6A]

DENFORD MACHINE TOOLS LTD BRIGHOUSE WEST YORKSHIRE

DRN BY A McHENRY

DATE 29-9-93

A3- 310578 A

IF IN DOUBT ASK

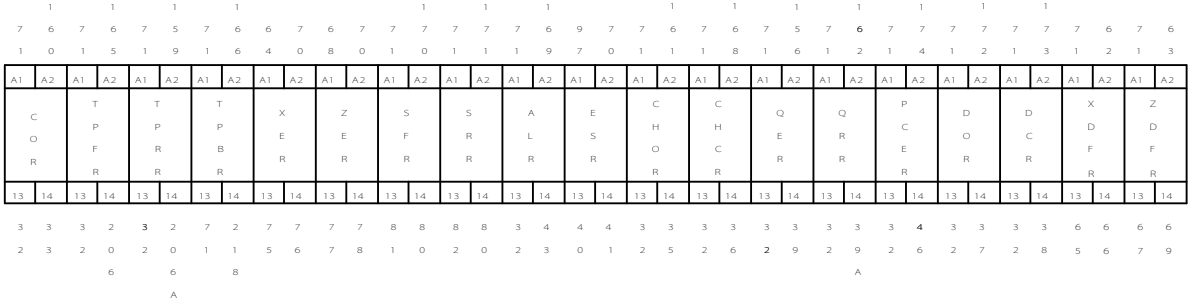

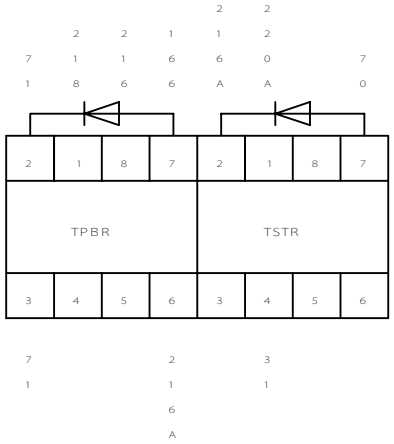

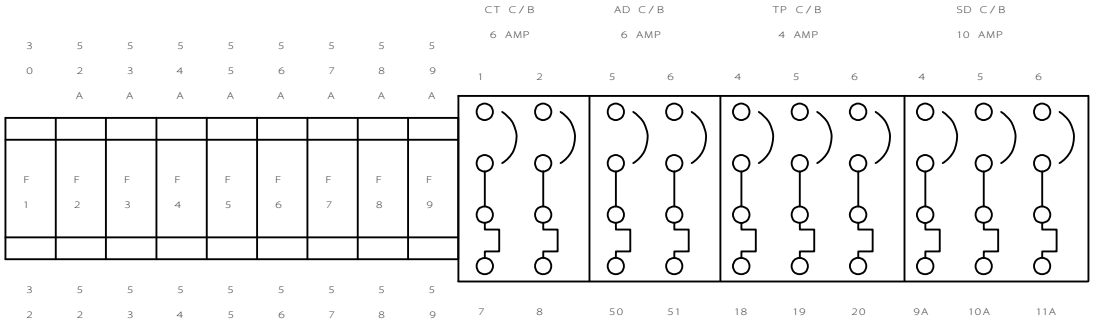

F1	110v CONTROL	6.3 A
F2	X AXIS 72v POWER	10 A
F3	X AXIS 72v POWER	10 A
F4	Z AXIS 72v POWER	10 A
F5	Z AXIS 72v POWER	10 A
F6	X AXIS 18v CONTROL	3.15 A
F7	X AXIS 18v CONTROL	3.15 A
F8	Z AXIS 18v CONTROL	3.15 A
F9	Z AXIS 18v CONTROL	3.15 A

ALL FUSES ARE T TYPE

95 TERMINALS AND 4 EARTHS

LINK (0.5mm GREY)

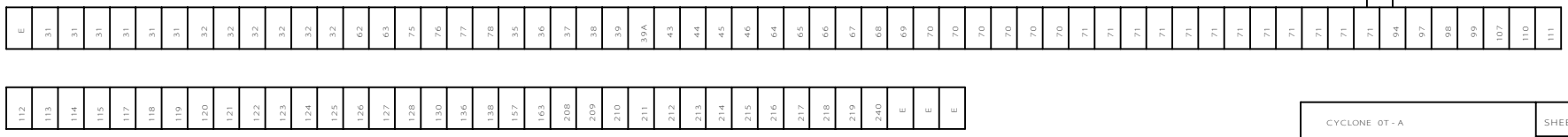

CYCLONE 0T-A
RELAY WIRING
DIAGRAM
220v SUPPLY

SHEET 6
[CYC-A]
[N6A]

DENFORD MACHINE TOOLS LTD BRIGHOUSE WEST YORKSHIRE

DRN BY A McHENRY

DATE 29-9-93

A3- 310578 A

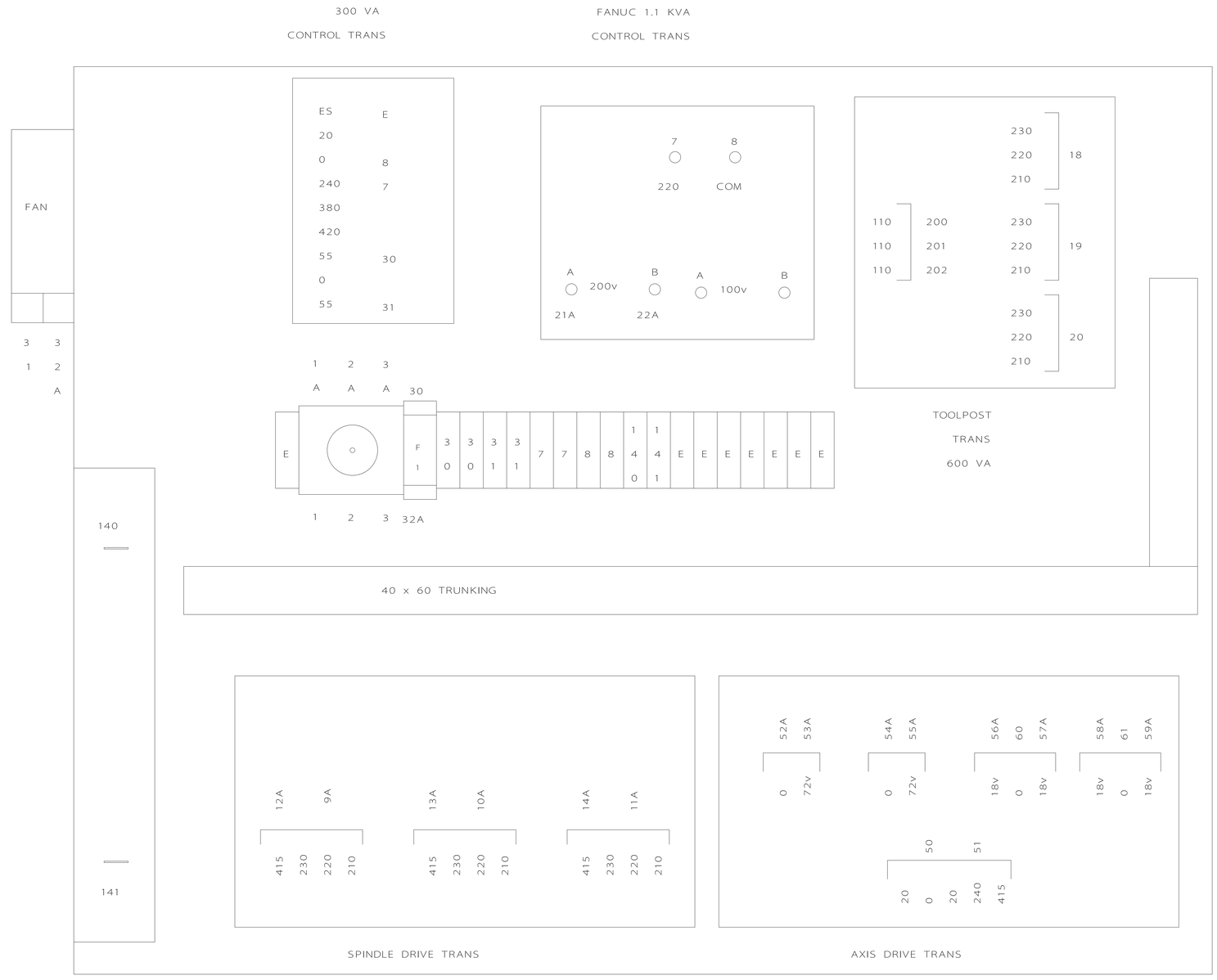

B

16 WAY

SOCKET

1	9A	
2	10A	
3	11A	
4	12A	
5	13A	
6	14A	
7	52A	
8	53A	
9	54A	
10	55A	
11	56A	RED 1mm
12	57A	RED 1mm
13	58A	RED 1mm
14	59A	RED 1mm
15	60	RED 1mm
16	61	RED 1mm

A

24 WAY

SOCKET

1	1A	BLK 2.5mm
2	2A	BLK 2.5mm
3	3A	BLK 2.5mm
4	1	BLK 2.5mm
5	2	BLK 2.5mm
6	3	BLK 2.5mm
7	7	
8	8	
9	21A	
10	22A	
11	30	
12	31	
13	18	
14	19	
15	20	
16	200	
17	201	
18	202	
19	140	
20	141	
21	50	
22	51	
23		
24		

ALL WIRING IS IN
1.5mm BLACK
UNLESS NOTED
OTHERWISE

CYCLONE 0T-A
TRANSFORMER BOX
220v SUPPLY

SHEET 7

[CYC-A]

[N7]

DENFORD MACHINE TOOLS LTD BRIGHOUSE WEST YORKSHIRE

DRN BY A McHENRY

DATE 11-7-93

A3- 310543 G

IF IN DOUBT ASK

300 VA
CONTROL TRANS

FANUC 1.1 KVA
CONTROL TRANS

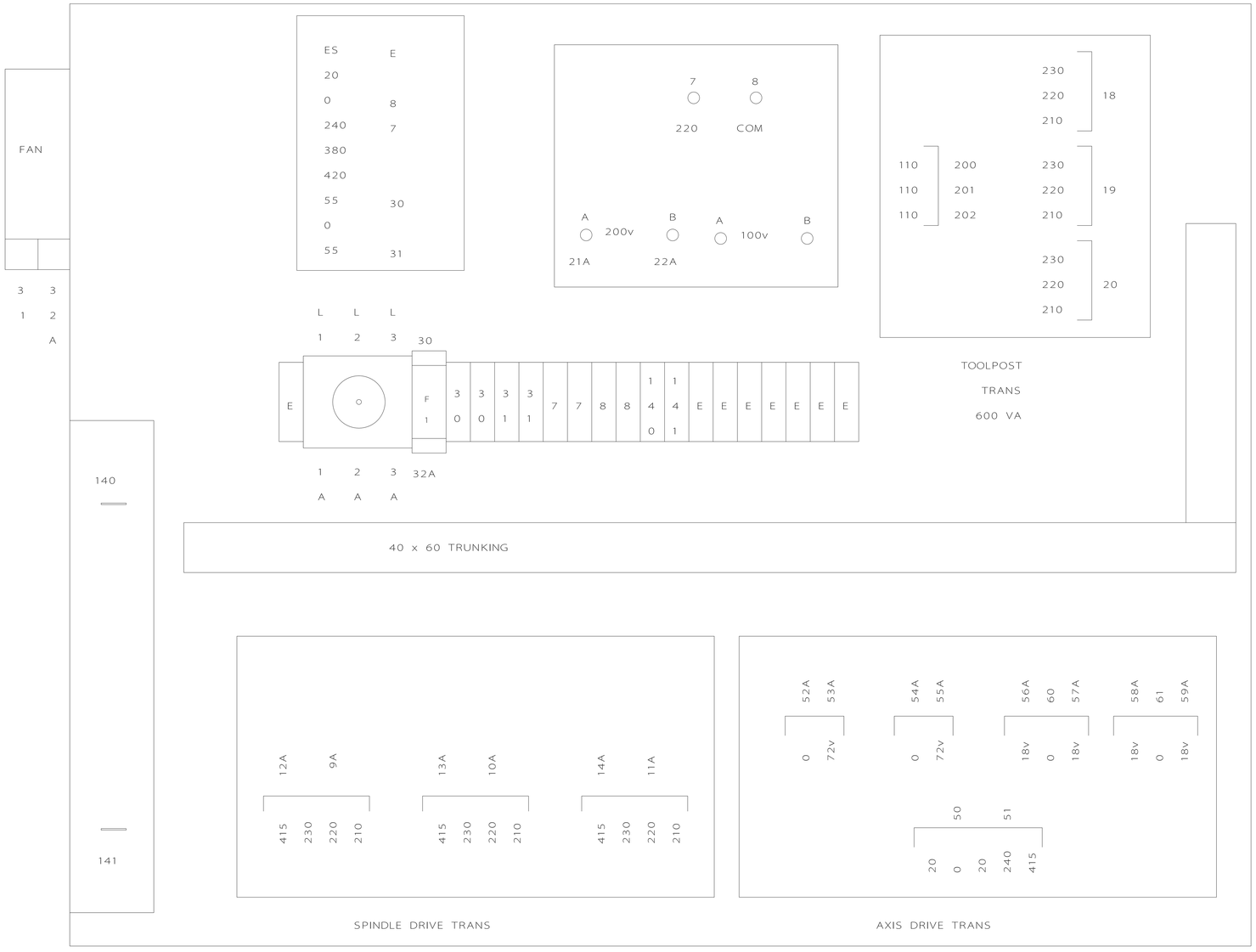

SPINDLE
BRAKING
RESISTOR

FEMALE INSERTS
AT TRANS BOX END

B
16 WAY
SOCKET

1	200	
2	201	
3	202	
4	12A	
5	13A	
6	14A	
7	52A	
8	53A	
9	54A	
10	55A	
11	56A	RED 1mm
12	57A	RED 1mm
13	58A	RED 1mm
14	59A	RED 1mm
15	60	RED 1mm
16	61	RED 1mm

A
24 WAY
SOCKET

1	1A	BLK 2.5mm
2	2A	BLK 2.5mm
3	3A	BLK 2.5mm
4		
5		
6		
7	7	
8	8	
9	21A	
10	22A	
11	30	
12	31	
13	18	
14	19	
15	20	
16	9A	
17	10A	
18	11A	
19	140	
20	141	
21	50	
22	51	
23		
24		

ALL WIRING IS IN
1.5mm BLACK
UNLESS NOTED
OTHERWISE

CYCLONE 0T-A
TRANSFORMER BOX
220v SUPPLY

SHEET 7
[CYC-A]
[N7A]

DENFORD MACHINE TOOLS LTD BRIGHOUSE WEST YORKSHIRE

DRN BY A McHENRY

DATE 2-9-93

A3- 310543 H

IF IN DOUBT ASK

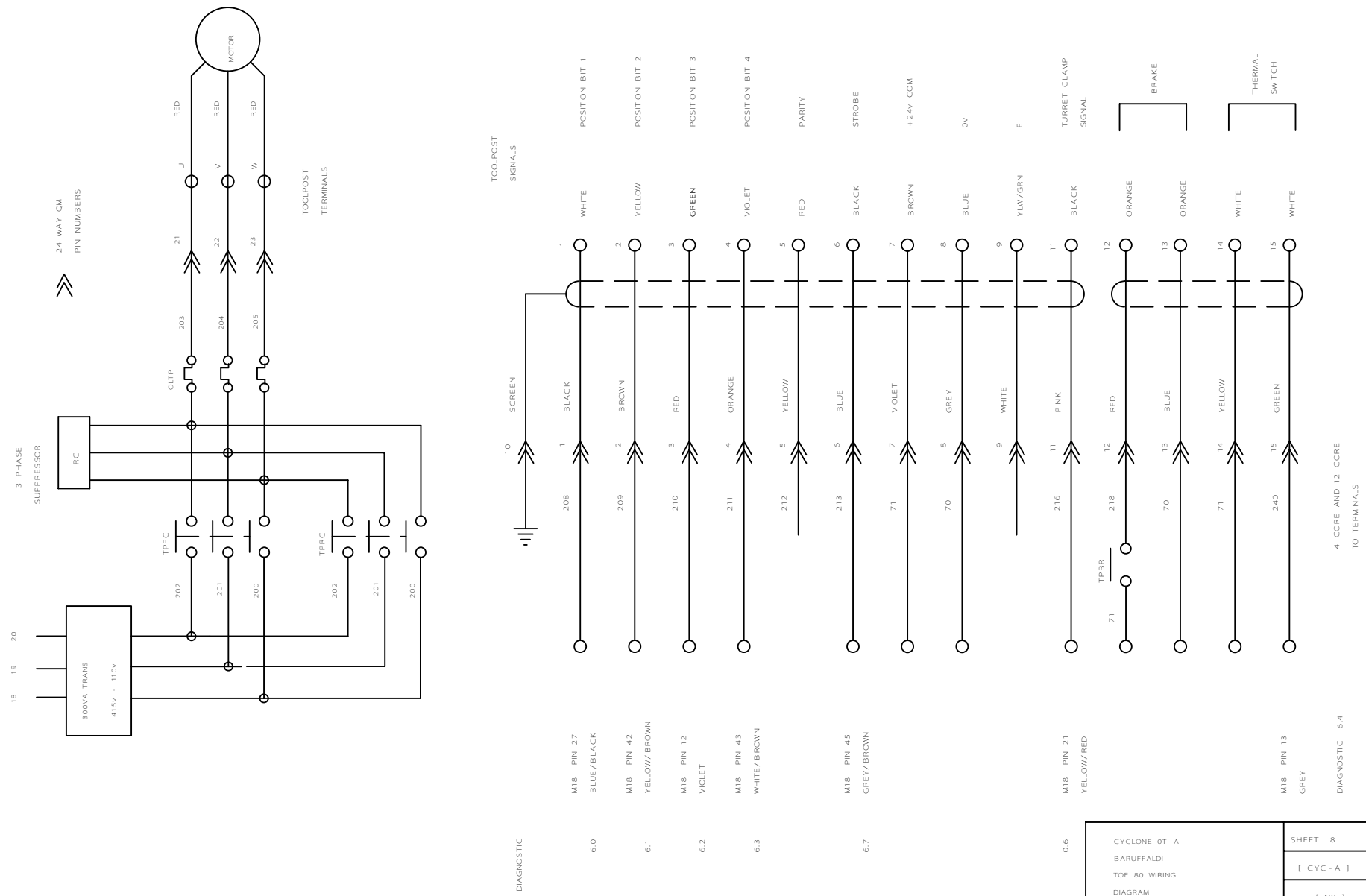

CYCLONE 0T-A
BARUFFALDI
TOE 80 WIRING
DIAGRAM

SHEET 8
[CYC-A]
[N8]

DENFORD MACHINE TOOLS LTD BRIGHOUSE WEST YORKSHIRE

DRN BY A McHENRY

DATE 29-9-93

A3- 310557 C

DENFORD MACHINE TOOLS LTD BRIGHOUSE WEST YORKSHIRE

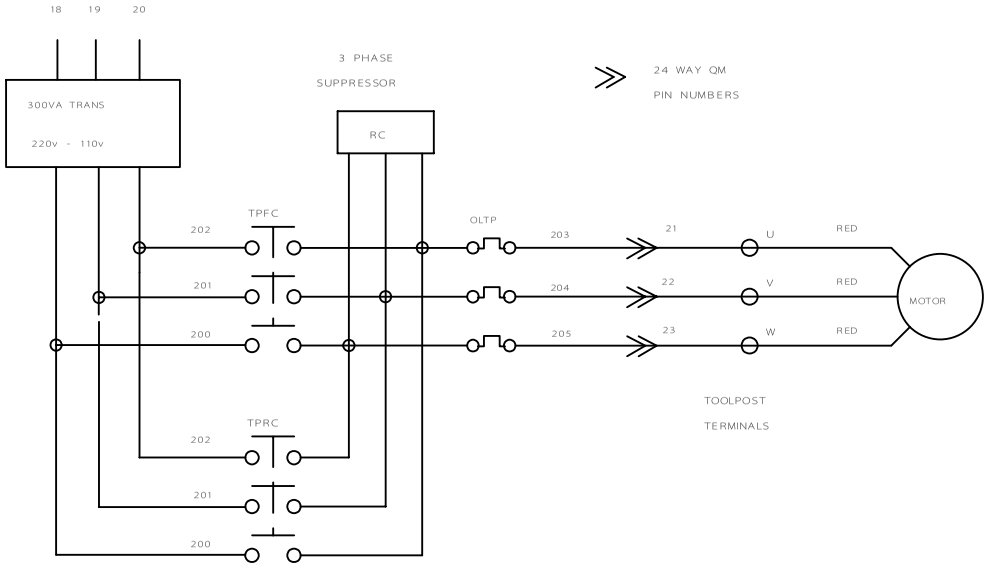

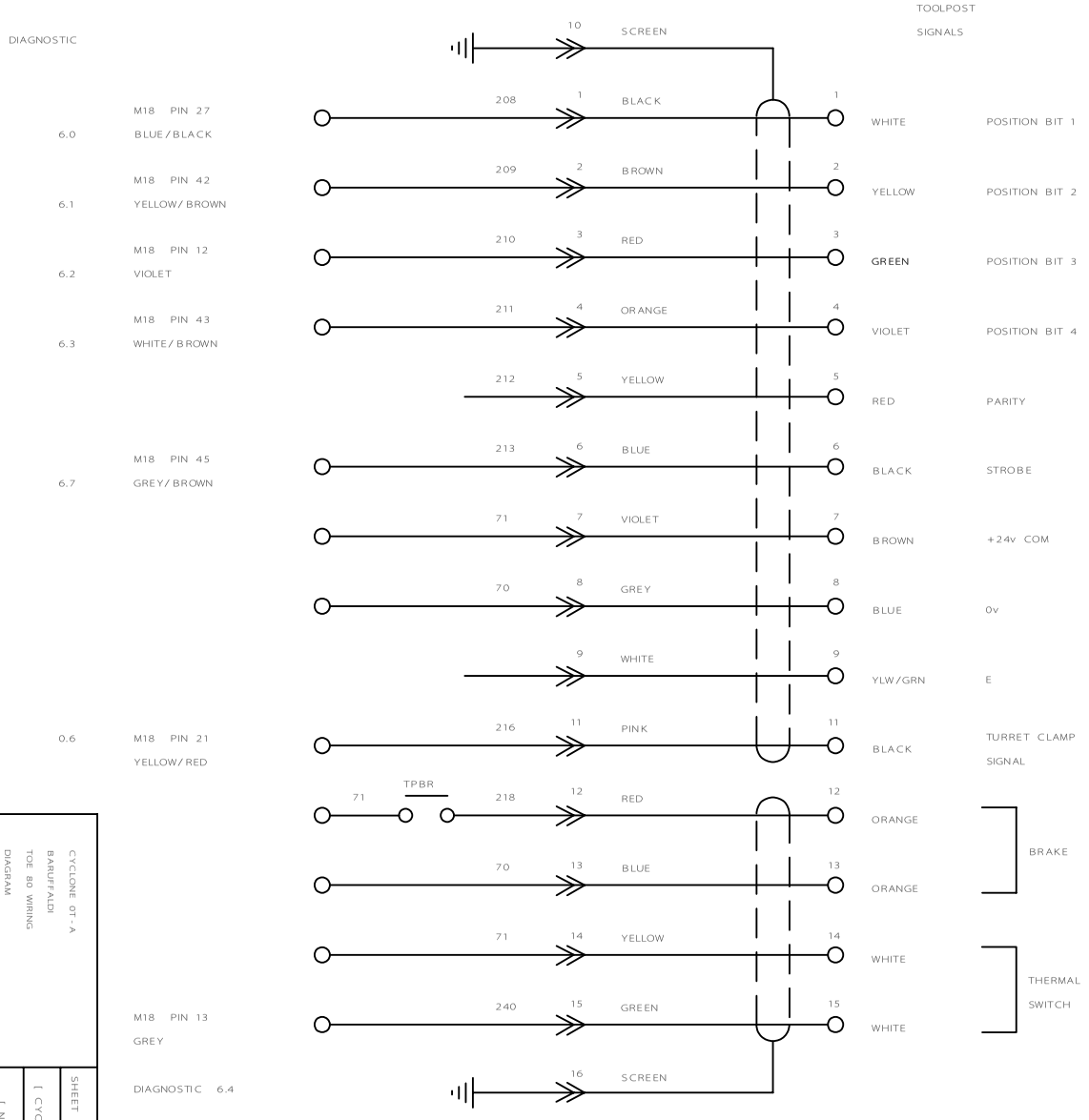

DRN BY A McHENRY

DATE 29-9-93

A3- 310557 D

CYCLONE QT-A
BARUFFALDI
TOE 80 WIRING
DIAGRAM

SHEET 8

[CYC-A]

[N8A]

IF IN DOUBT ASK

IF IN DOUBT ASK

M6

(CONTROL)

20 WAY MALE

CONNECTOR

DESCRIPTION	PIN No
PRDY A	1
OVL A	3
VRDY A	4
V COMMAND	7
PRDY B	14
OVL B	16
VRDY B	17
0v	20

REST OF PINS

NOT USED

GREEN 64 — XER — 70 / 0v

YELLOW 65 — XDFR

RED 71 — 24v

BLUE 66

BLUE — TB2 - 19

RED — TB2 - 20

TERMINALS ON

X AXIS

NORWIN DRIVE BOARD

SEE SHEET 10

XER X AXIS ENABLE RELAY

XDFR X DRIVE FAULT RELAY

M8

(CONTROL)

20 WAY MALE

CONNECTOR

DESCRIPTION	PIN No
PRDY A	1
OVL A	3
VRDY A	4
V COMMAND	7
PRDY B	14
OVL B	16
VRDY B	17
0v	20

REST OF PINS

NOT USED

GREEN 68 — ZER — 70 / 0v

YELLOW 67 — ZDFR

RED 71 — 24v

BLUE 69

BLUE — TB2 - 19

RED — TB2 - 20

TERMINALS ON

Z AXIS

NORWIN DRIVE BOARD

SEE SHEET 10

ZER Z AXIS ENABLE RELAY

ZDFR Z DRIVE FAULT RELAY

CYCLONE 0T-A

M6, M8

CONTROL TO AXIS

DRIVE SIGNALS

SHEET 9

[CYC-A]

[N9]

DENFORD MACHINE TOOLS LTD BRIGHOUSE WEST YORKSHIRE

DRN BY A McHENRY

DATE 29-9-93

A3 - 310536

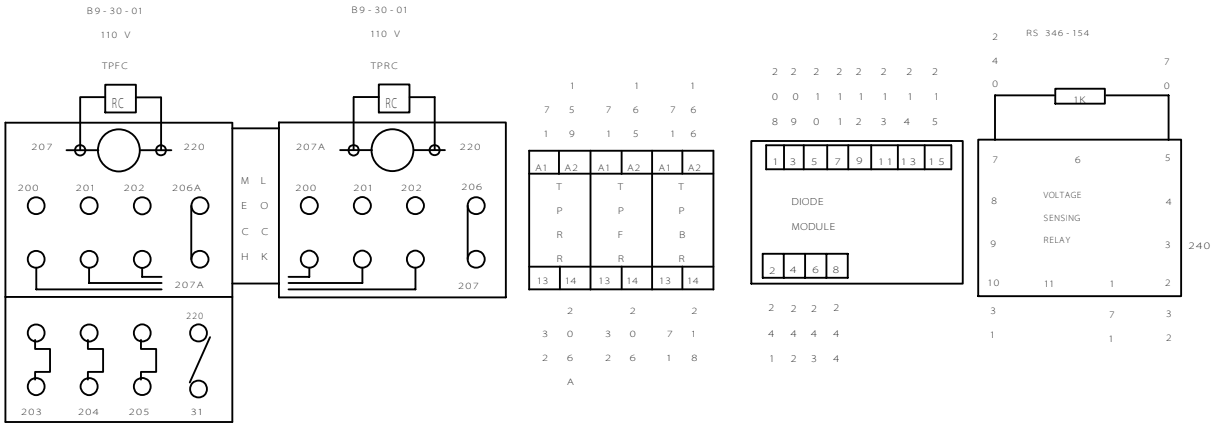

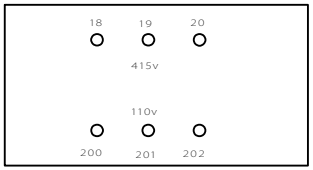

300 VA
TOOLPOST
TRANSFORMER
MOUNTED ON
BOTTOM OF
MAIN CABINET

SHEET No

OF

SENIOR 200
BARUFFALDI TURRET
RETROFIT BOX

DENFORD MACHINE TOOLS LTD BRIGHOUSE WEST YORKSHIRE

DRN BY A McHENRY

DATE 20-01-91

A3 - 310568

DENFORD MACHINE TOOLS LTD BRIGHOUSE WEST YORKSHIRE

MDC = MAIN DRIVES CONTACTOR
HPC = HYDRAULIC PUMP CONTACTOR
CMC = COOLANT MOTOR CONTACTOR
OLCM = OVERLOAD COOLANT MOTOR
(RATING 0.6 - 0.9 AMPS)
OLHM = OVERLOAD HYDRAULIC MOTOR
(RATING 2.8 - 4.2 AMPS)

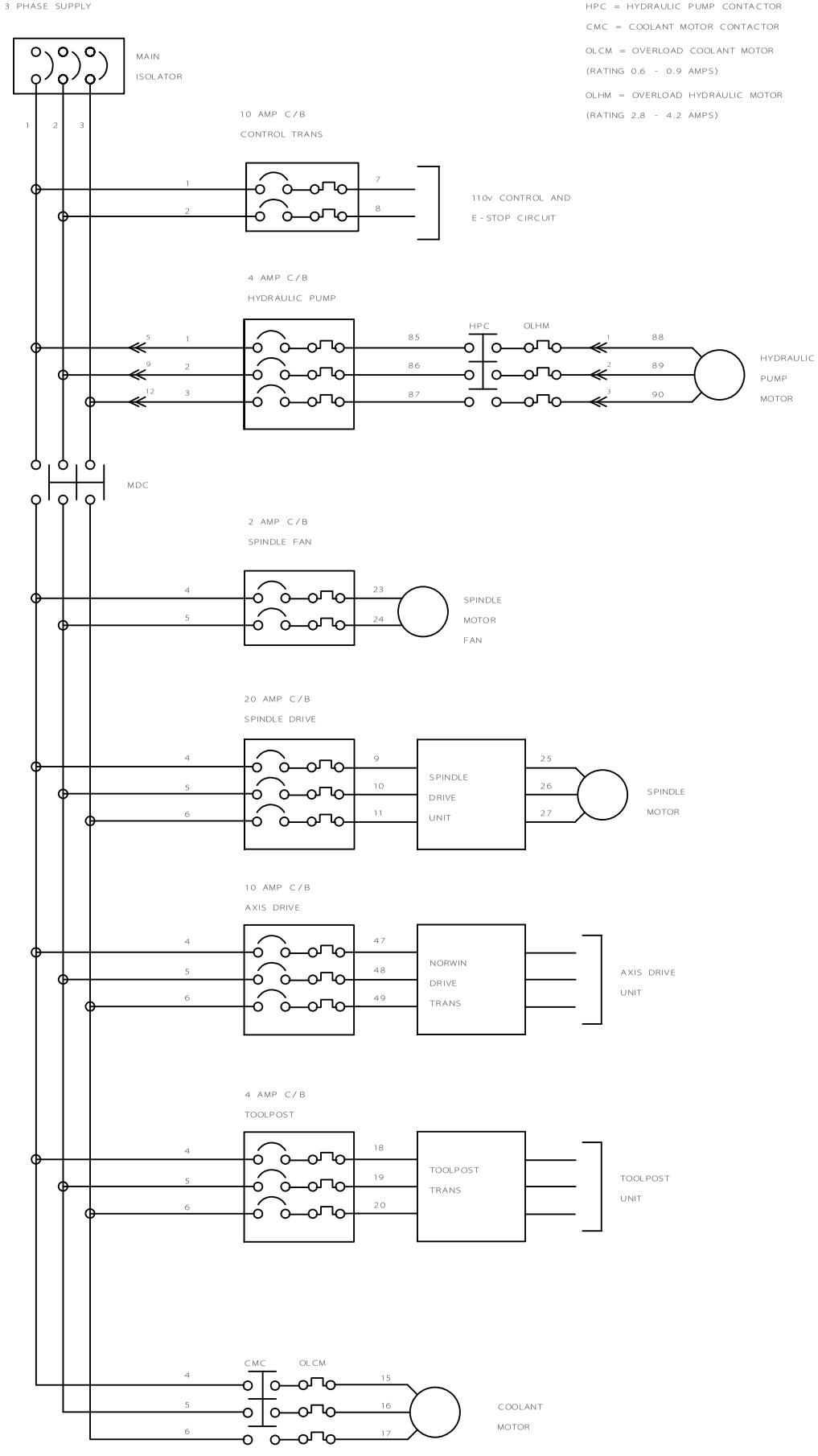

DRN BY A McHENRY

DATE 10-10-91

A3 - 310540 A

CYCLONE OT-A
MAIN POWER
SCHEMATIC

SHEET 1
OF

X AXIS DRIVE BOARD

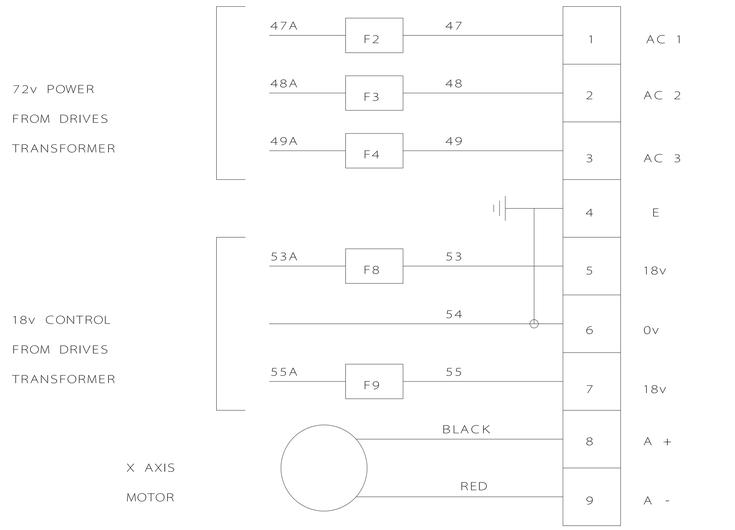

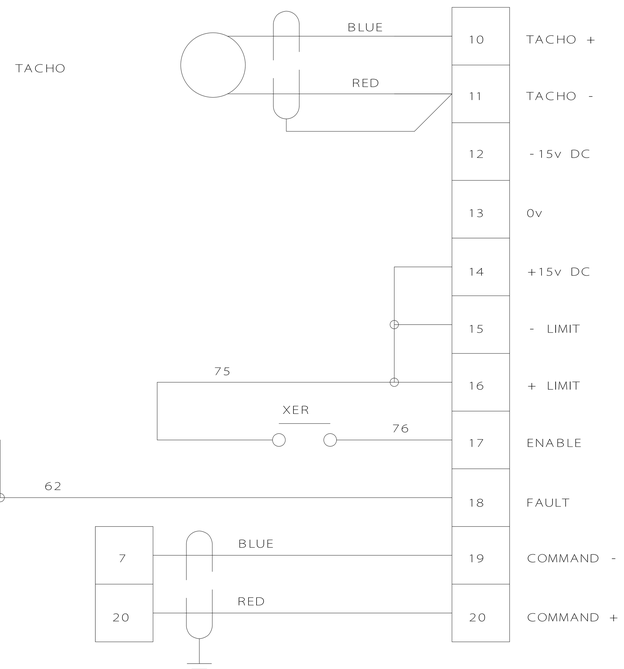

ANALOGUE
FROM M6
CONNECTOR
ON MAIN PCB

Z AXIS DRIVE BOARD

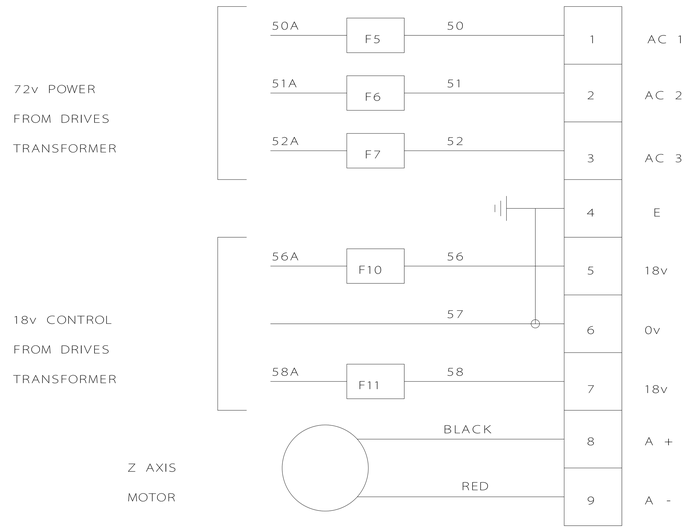

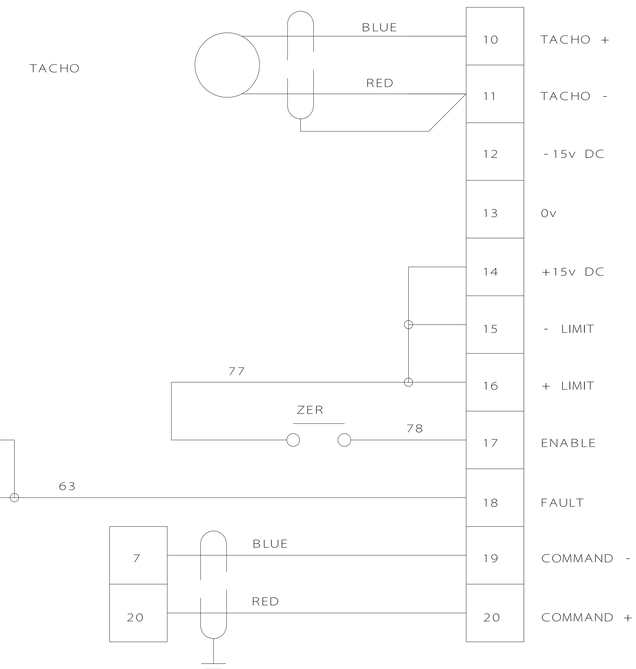

ANALOGUE
FROM M8
CONNECTOR
ON MAIN PCB

SHEET

CYCLONE 0T-A
DRIVE BOARD
WIRING

OF

DENFORD MACHINE TOOLS LTD BRIGHOUSE WEST YORKSHIRE

DRN BY A McHENRY

DATE 8-1-92

A3- 310544 A

X AXIS DRIVE BOARD

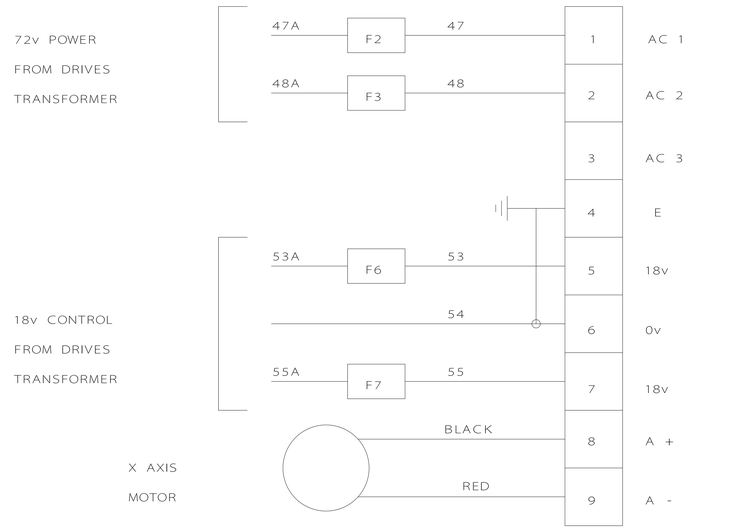

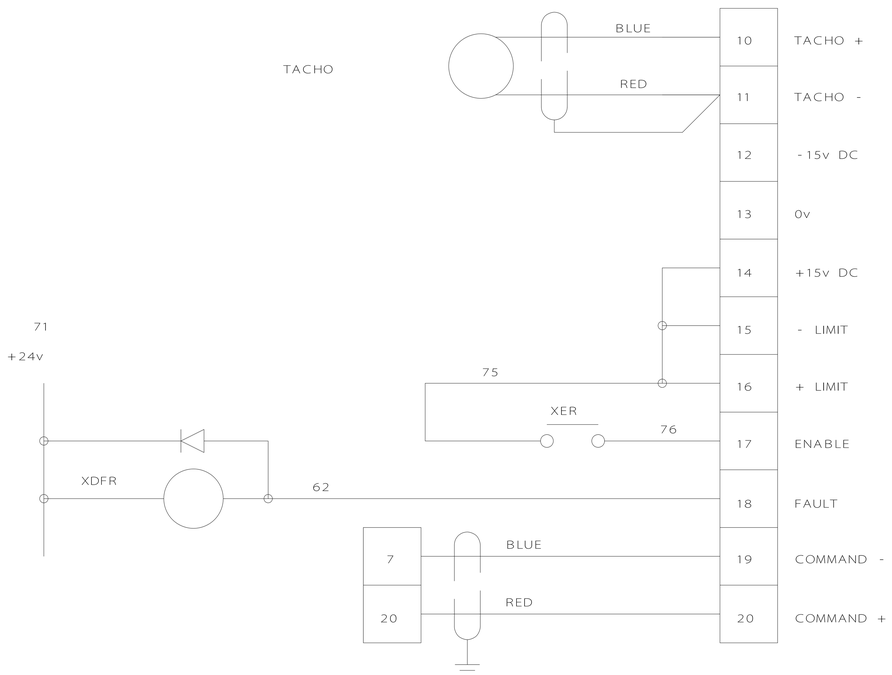

ANALOGUE
FROM M6
CONNECTOR
ON MAIN PCB

Z AXIS DRIVE BOARD

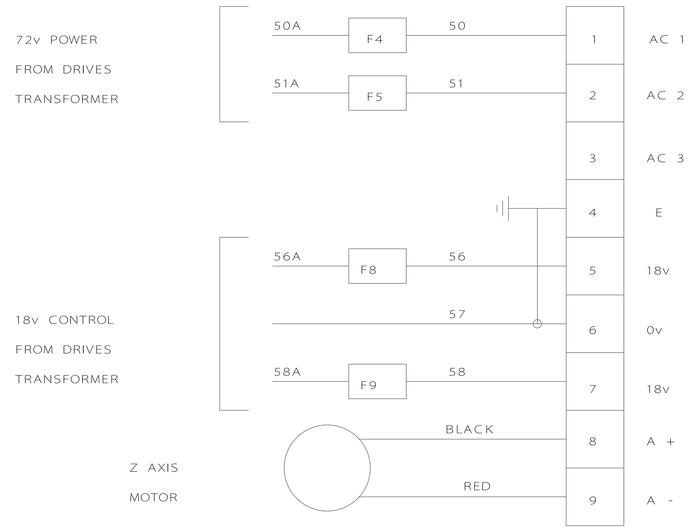

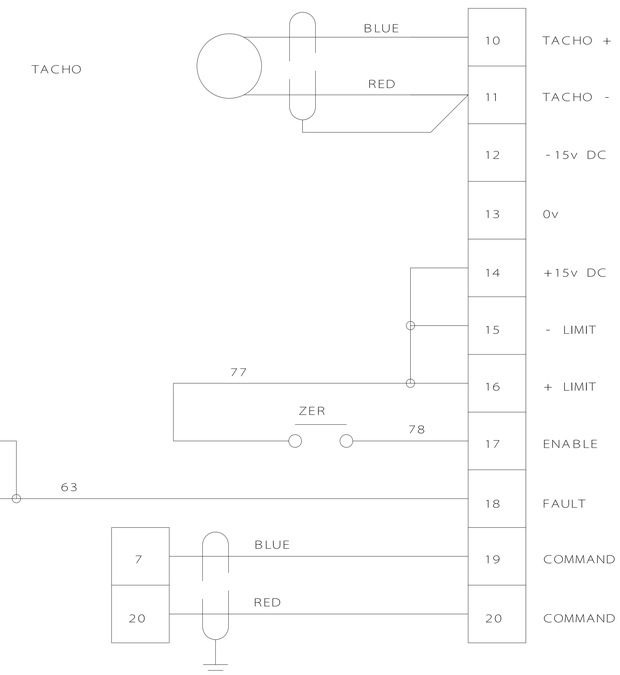

ANALOGUE
FROM M8
CONNECTOR
ON MAIN PCB

CYCLONE 0T-A
DRIVE BOARD
WIRING

SHEET
OF

DENFORD MACHINE TOOLS LTD BRIGHOUSE WEST YORKSHIRE

DRN BY A McHENRY

DATE 10-1-92

A3- 310544 B

HEADSTOCK CONNECTION BOX

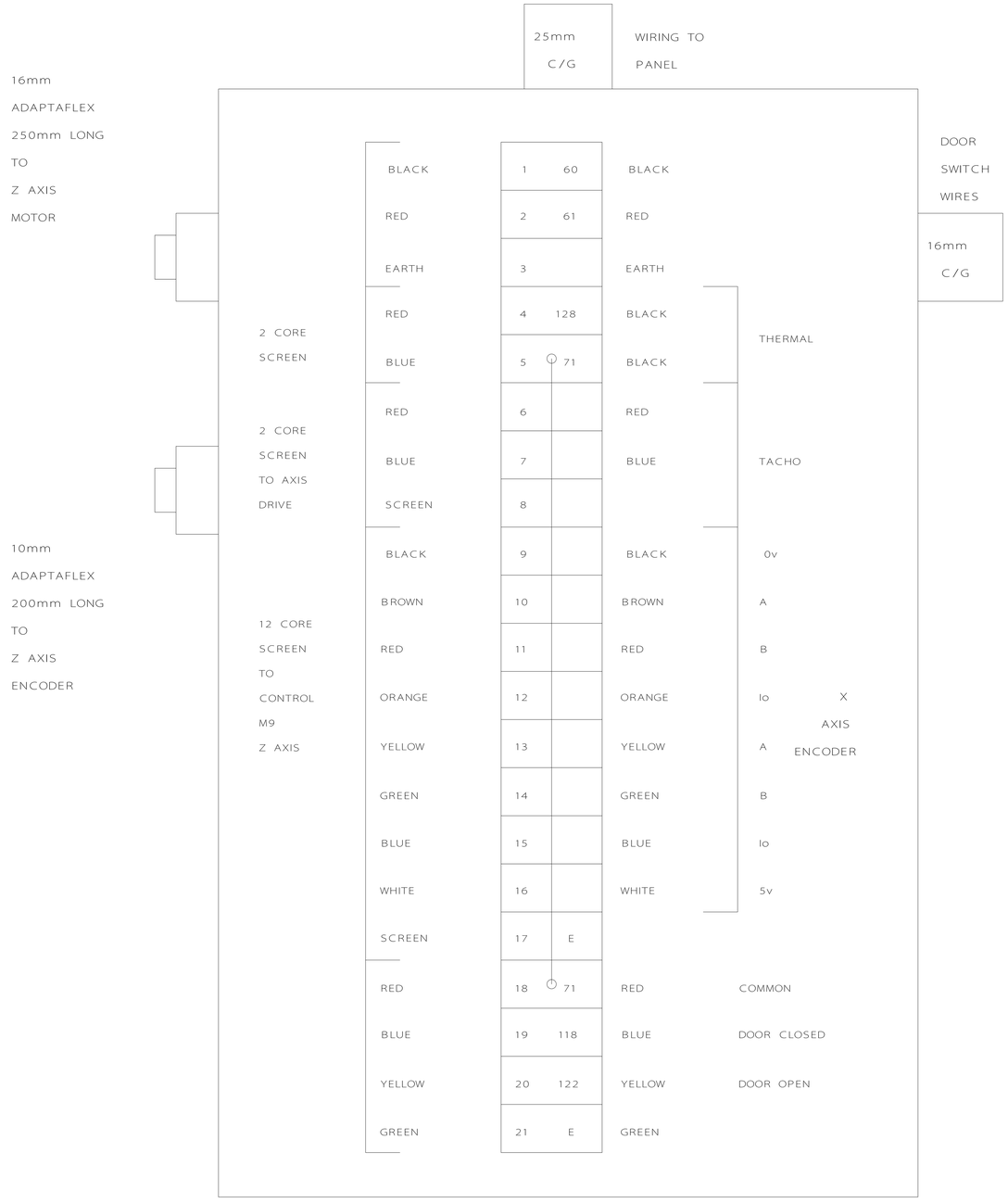

SADDLE CONNECTION BOX

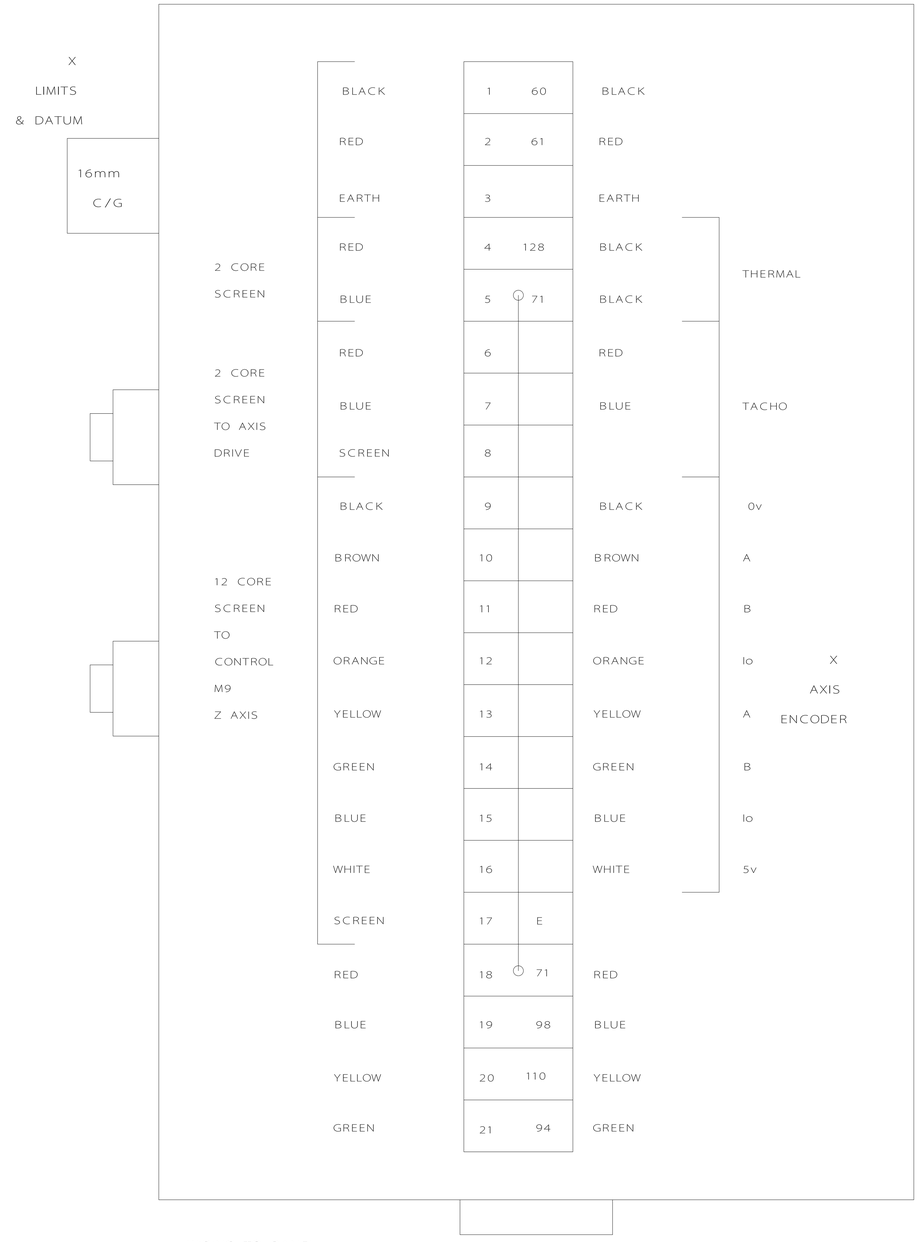

C/G = COMPRESSION GLAND

CYCLONE 0T-A
SADDLE AND
HEADSTOCK
CONNECTION BOXES

SHEET 8
OF

DENFORD MACHINE TOOLS LTD BRIGHOUSE WEST YORKSHIRE

DRN BY A McHENRY

DATE 4-6-92

A3- 310545 A

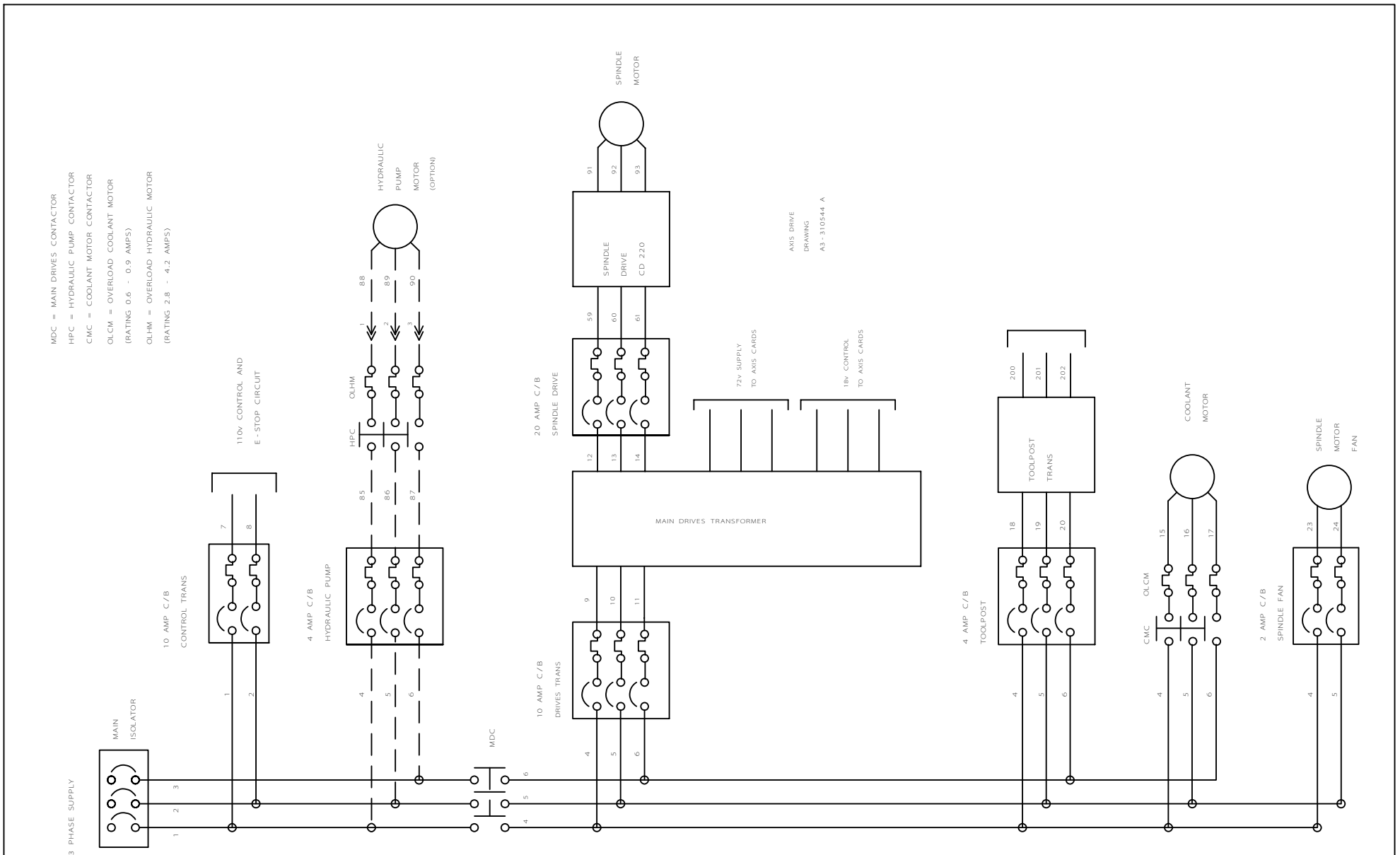

DENFORD MACHINE TOOLS LTD BRIGHOUSE WEST YORKSHIRE	DRN BY A McHENRY	DATE 03 - 01 - 92	A3 - 310540 B

CYCLONE OT - A
MAIN POWER SCHEMATIC
(SINGLE DRIVES TRANS.)

SHEET 1
OF

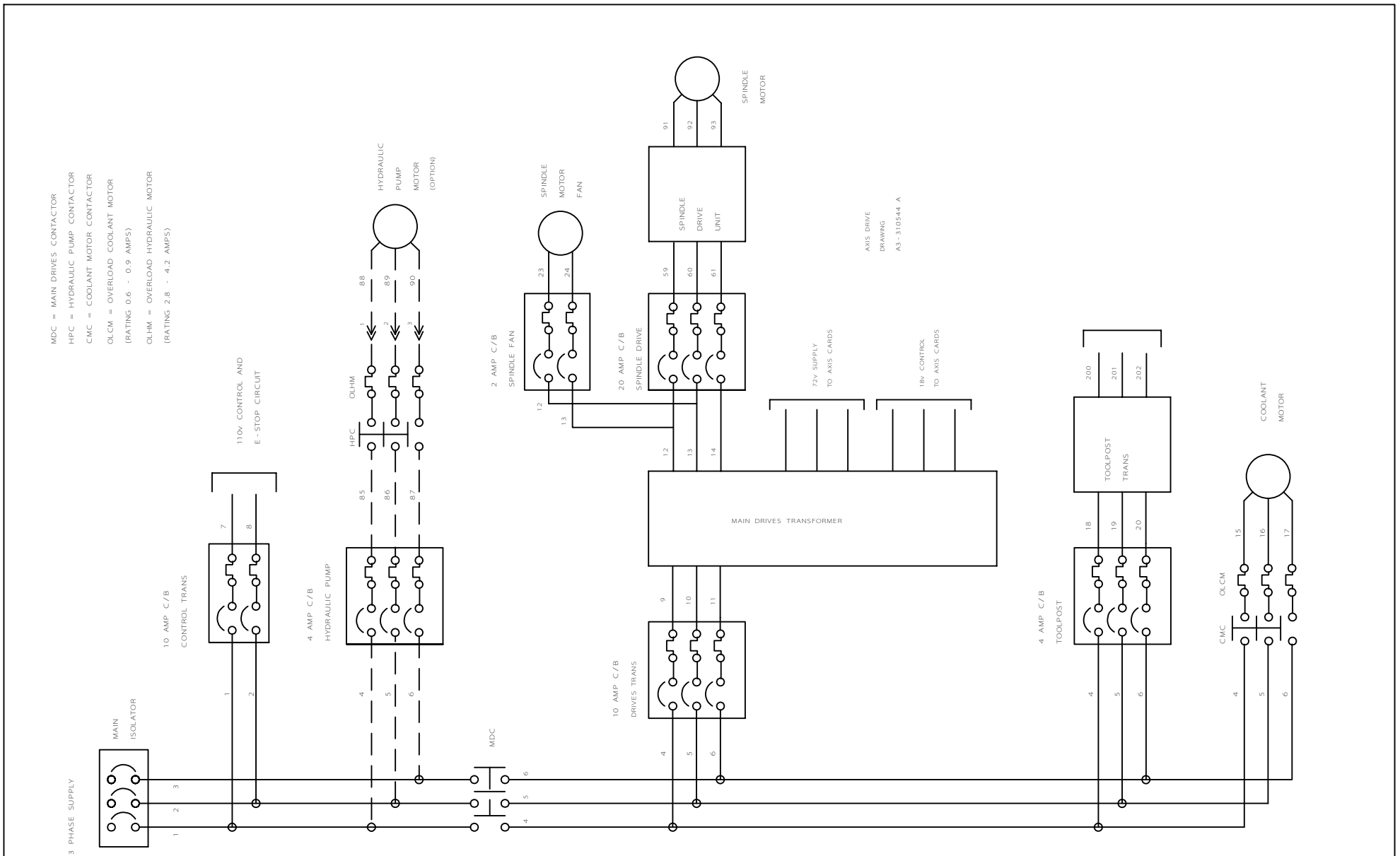

CYCLONE OT-A
MAIN POWER SCHEMATIC
(SINGLE DRIVES TRANS.)

SHEET 1
OF

DENFORD MACHINE TOOLS LTD BRIGHOUSE WEST YORKSHIRE

DRN BY A McHENRY

DATE 03-01-92

A3 - 310540 C

DENFORD MACHINE TOOLS LTD BRIGHOUSE WEST YORKSHIRE

MDC = MAIN DRIVES CONTACTOR
HPC = HYDRAULIC PUMP CONTACTOR
CMC = COOLANT MOTOR CONTACTOR
OLCM = OVERLOAD COOLANT MOTOR
(RATING 0.6 - 0.9 AMPS)
OLHM = OVERLOAD HYDRAULIC MOTOR
(RATING 2.8 - 4.2 AMPS)

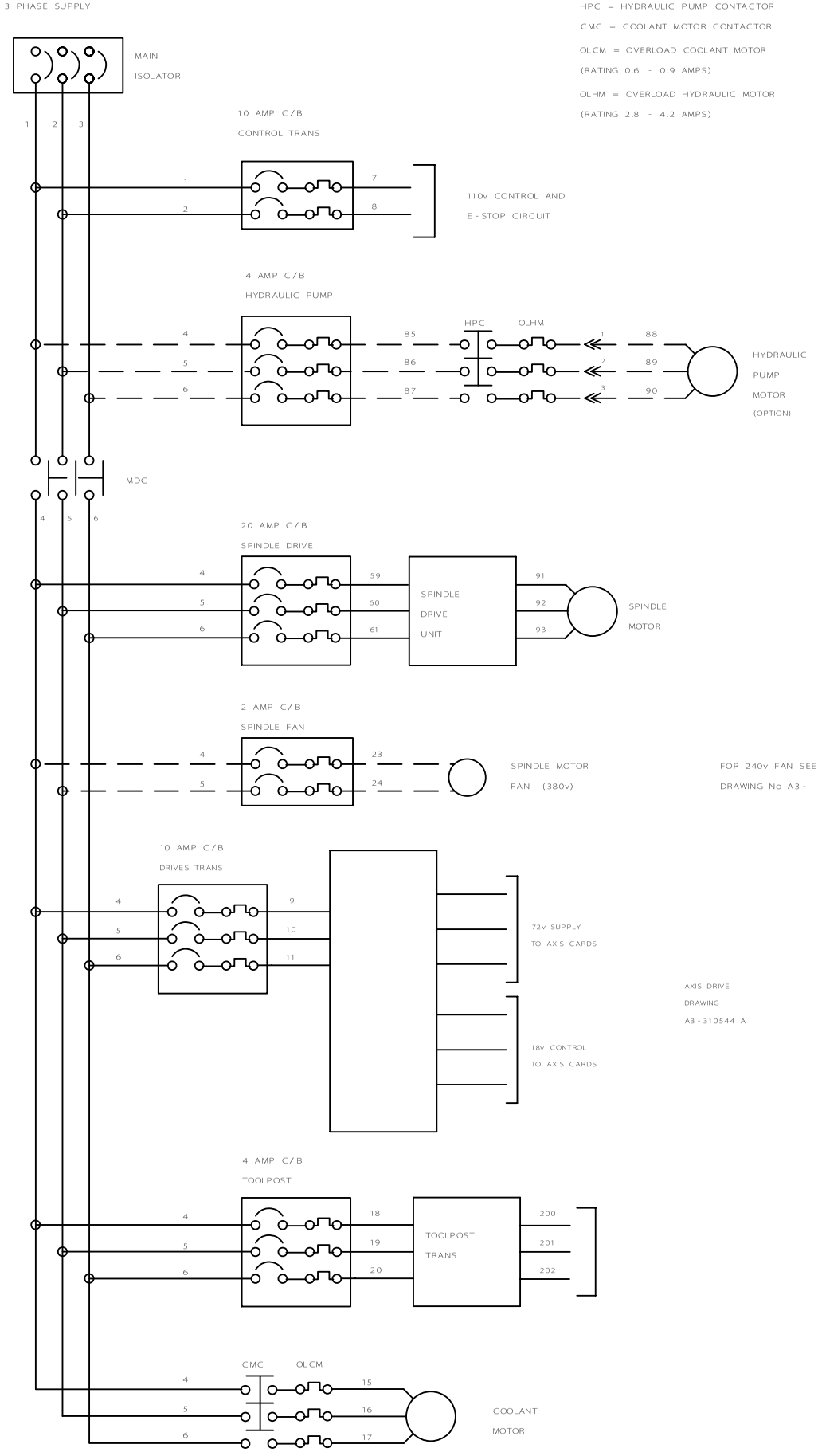

DRN BY A McHENRY

DATE 21-5-92

A3- 310540 D

CYCLONE DT-A
MAIN POWER SCHEMATIC
(KEB SPINDLE DRIVE)

SHEET 1 OF

DENFORD MACHINE TOOLS LTD BRIGHOUSE WEST YORKSHIRE

MDC = MAIN DRIVES CONTACTOR
HPC = HYDRAULIC PUMP CONTACTOR
CMC = COOLANT MOTOR CONTACTOR
OLCM = OVERLOAD COOLANT MOTOR
(RATING 0.6 - 0.9 AMPS)
OLHM = OVERLOAD HYDRAULIC MOTOR
(RATING 2.8 - 4.2 AMPS)

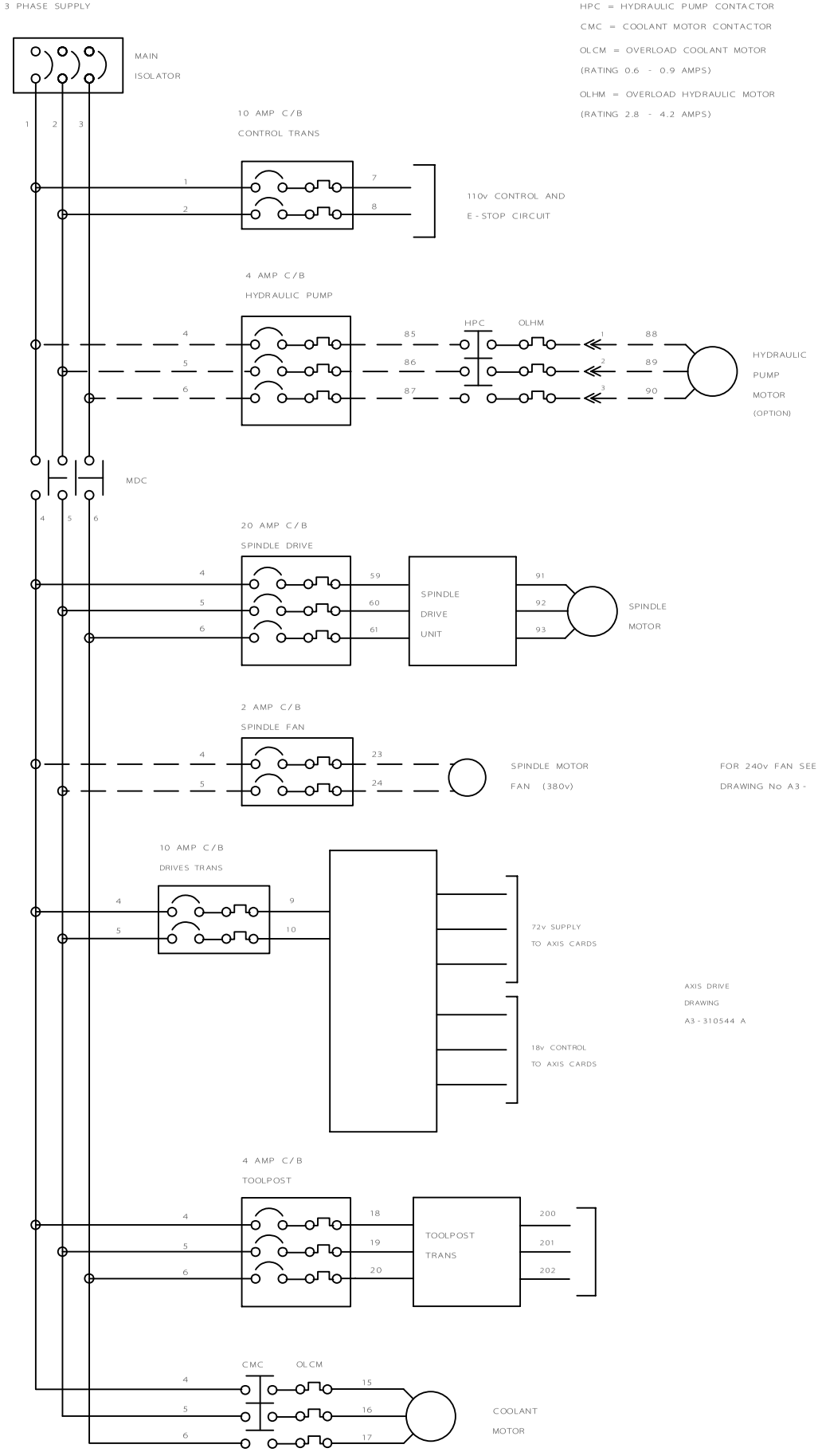

DRN BY	DATE	A3 -
A McHENRY	21-5-92	310540 E

CYCLONE DT-A
MAIN POWER SCHEMATIC
(KEB SPINDLE DRIVE)

SHEET 1 OF

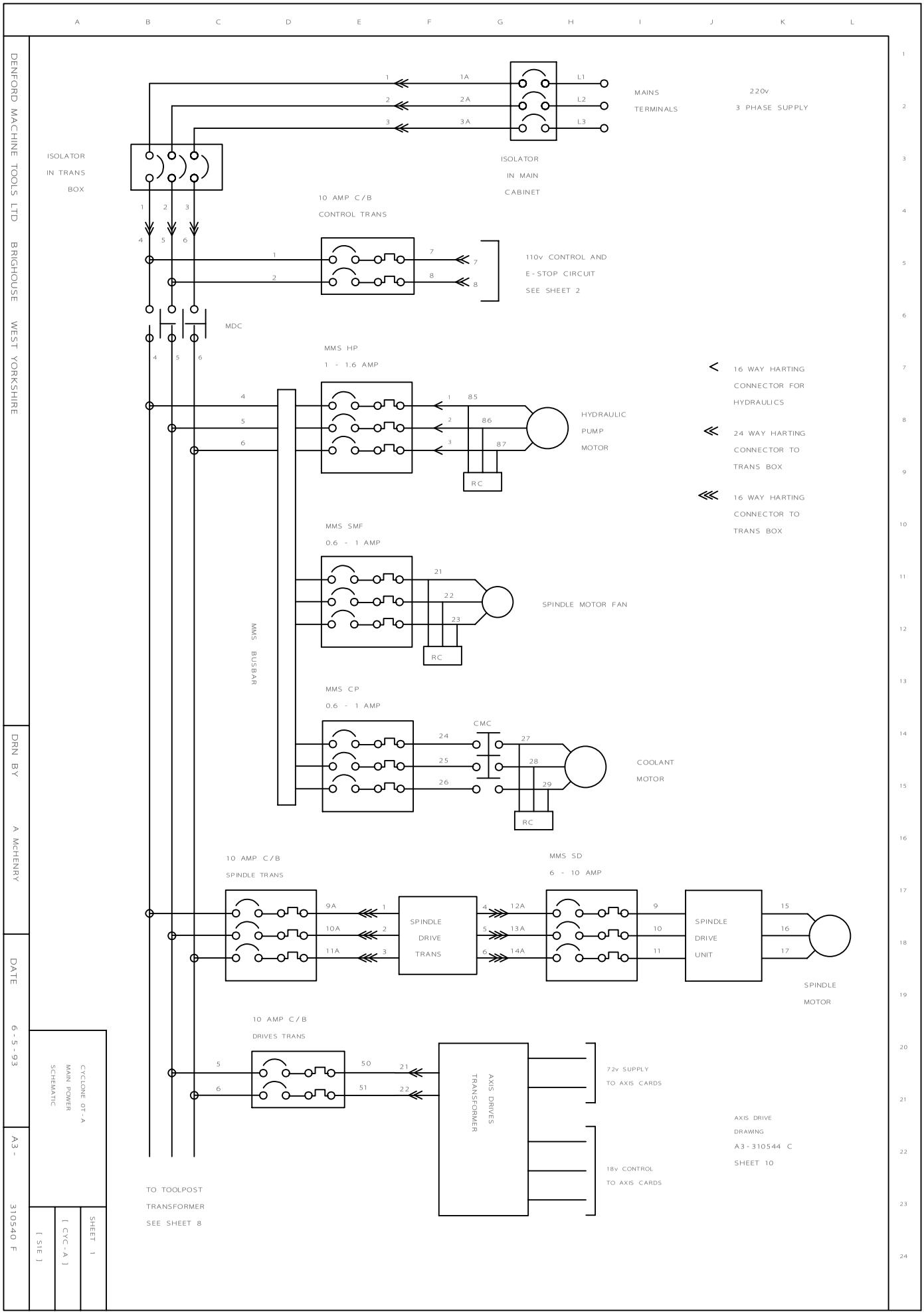
DENFORD MACHINE TOOLS LTD BRIGHOUSE WEST YORKSHIRE
DRN BY A McHENRY
DATE 6-5-93
A3 - 310540 F
CYCLONE 0T-A
MAIN POWER SCHEMATIC
[SIE]
[CYC-A]
SHEET 1
ISOLATOR IN TRANS BOX
ISOLATOR IN MAIN CABINET
MAINS TERMINALS
220v 3 PHASE SUPPLY
10 AMP C/B CONTROL TRANS
110v CONTROL AND E-STOP CIRCUIT SEE SHEET 2
MDC
MMS HP 1 - 1.6 AMP
HYDRAULIC PUMP MOTOR
RC
MMS SMF 0.6 - 1 AMP
SPINDLE MOTOR FAN
MMS BUSBAR
MMS CP 0.6 - 1 AMP
CMC
COOLANT MOTOR
16 WAY HARTING CONNECTOR FOR HYDRAULICS
24 WAY HARTING CONNECTOR TO TRANS BOX
16 WAY HARTING CONNECTOR TO TRANS BOX
10 AMP C/B SPINDLE TRANS
MMS SD 6 - 10 AMP
SPINDLE DRIVE TRANS
SPINDLE DRIVE UNIT
SPINDLE MOTOR
10 AMP C/B DRIVES TRANS
AXIS DRIVES TRANSFORMER
72v SUPPLY TO AXIS CARDS
18v CONTROL TO AXIS CARDS
AXIS DRIVE DRAWING A3-310544 C SHEET 10
TO TOOLPOST TRANSFORMER SEE SHEET 8

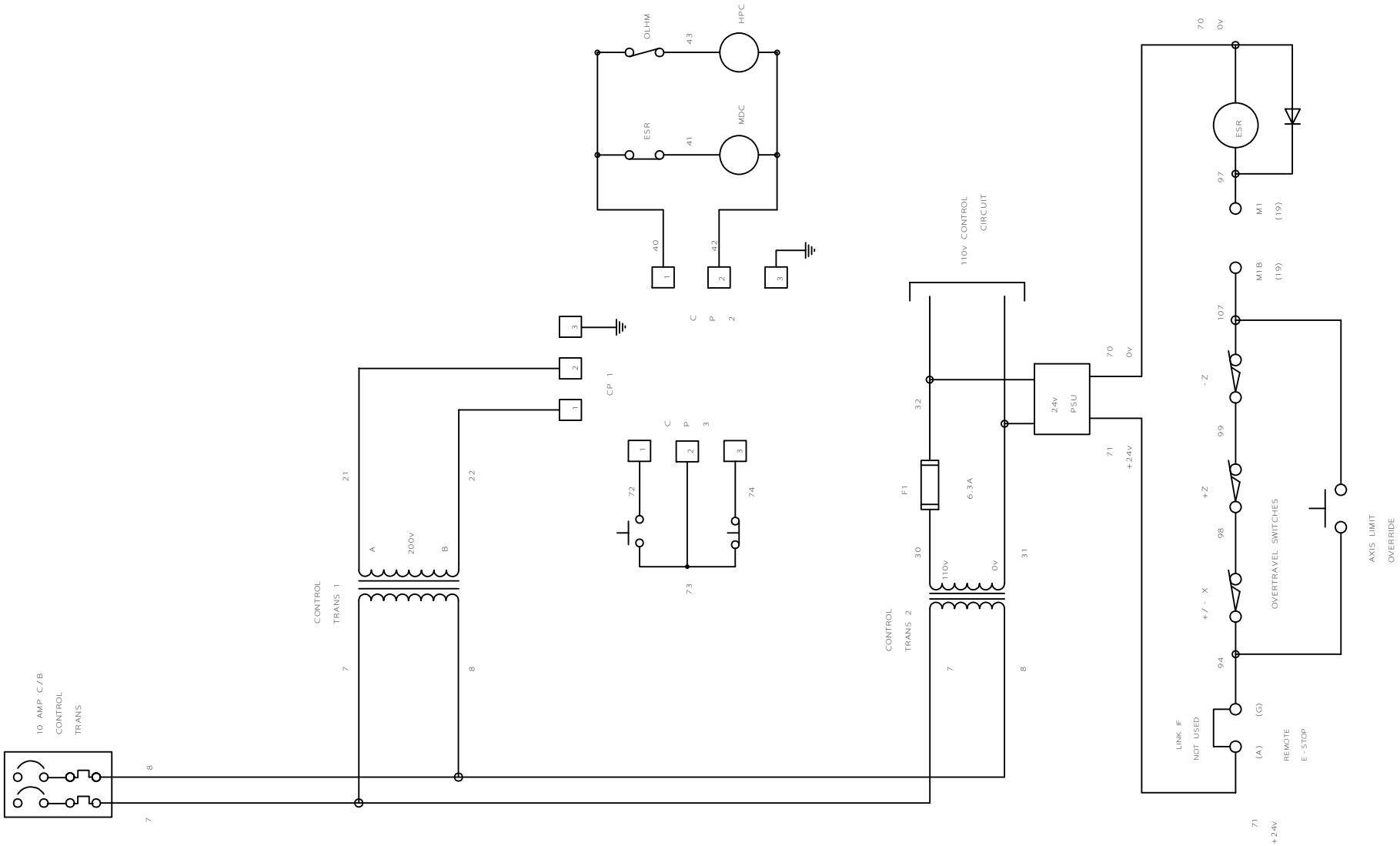

DENFORD MACHINE TOOLS LTD BRIGHOUSE WEST YORKSHIRE	DRN BY A McHENRY	DATE 10-10-91	A3- 310570

CYCLONE OT-A
E-STOP AND
CONTROL CIRCUIT

SHEET 2
OF

M18 CONTROL INPUTS

50 WAY
FEMALE
HONDA
CONNECTOR

DESCRIPTION	BIT	PIN
	0v	1
	0v	2
	0v	3
	COM1	4
SPINDLE ALARM	X00.5	5
AIR PRESSURE SWITCH	X02.0	6
TOOLPOST POSITION 7	X02.3	7
CHUCK OPEN FOOT SWITCH	X02.6	8
SPINDLE DRIVE THERMAL	X04.1	9
AUXILIARY INPUT 1	X04.4	10
TOOLPOST POSITION 8	4NC	11
TOOLPOST POSITION 3	X06.2	12
TOOLPOST THERMAL	X06.4	13
LUBE FLOAT SWITCH	X06.6	14
XAE	X08.0	15
+MITX	X08.2	16
+MITZ	X08.4	17
	X08.6	18
SPINDLE STOPPED	X00.1	19
SPEED DETECTED	X00.3	20
TOOLPOST CLAMPED	X00.6	21
DOOR CLOSED SWITCH	X02.1	22
CHUCK CLOSE FOOT SWITCH	X02.4	23
AUXILIARY INPUT 2	X02.7	24
EXTERNAL STOP	X04.2	25

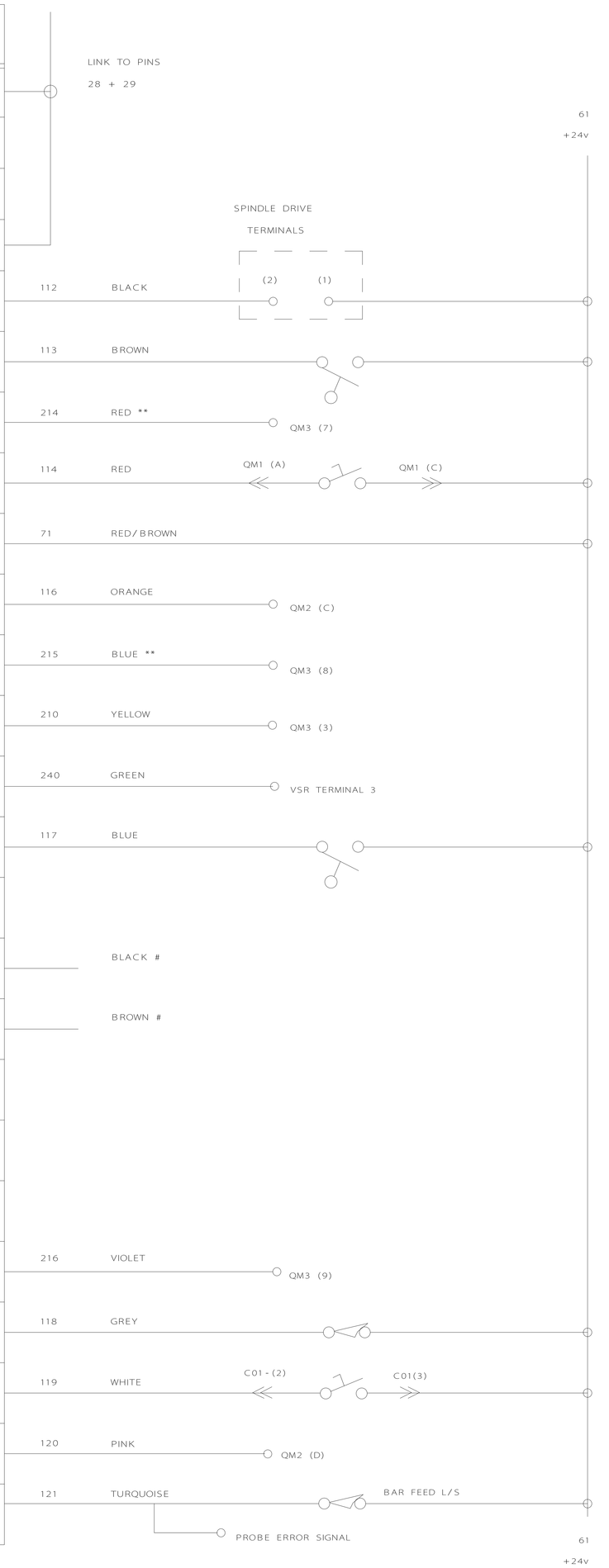

12 CORE SCREEN TO TERMINALS
** 2 CORE SCREEN TO TERMINALS
20 CORE SCREEN TO TERMINALS

QM1 8 WAY SOCKET (FOOT SWITCH)
QM2 8 WAY SOCKET (AUXILIARIES)
QM3 24 WAY SOCKET (TOOLPOST - BARUFFALDI)

DENFORD MACHINE TOOLS LTD BRIGHOUSE WEST YORKSHIRE

DRN BY A McHENRY

DATE 07-10-91

A3 - 310547 A

CYCLONE OT-A
M18
CONTROL INPUTS

SHEET
OF

DENFORD MACHINE TOOLS LTD BRIGHOUSE WEST YORKSHIRE

DRN BY A McHENRY

DATE 8-10-91

A3 - 310547 B

CYCLONE OT-A M18 CONTROL INPUTS

SHEET OF

M18 CONTROL INPUTS

50 WAY FEMALE HONDA CONNECTOR

DESCRIPTION	BIT	PIN
	0v	1
	0v	2
	0v	3
	COM1	4
SPINDLE ALARM	X00.5	5
AIR PRESSURE SWITCH	X02.0	6
TOOLPOST POSITION 7	X02.3	7
CHUCK OPEN FOOT SWITCH	X02.6	8
SPINDLE DRIVE THERMAL	X04.1	9
AUXILIARY INPUT 1	X04.4	10
TOOLPOST POSITION 8	4NC	11
TOOLPOST POSITION 3	X06.2	12
TOOLPOST THERMAL	X06.4	13
LUBE FLOAT SWITCH	X06.6	14
XAE	X08.0	15
+MITX	X08.2	16
+MITZ	X08.4	17
	X08.6	18
	X00.1	19
	X00.3	20
TOOLPOST CLAMPED	X00.6	21
DOOR CLOSED SWITCH	X02.1	22
CHUCK CLOSE FOOT SWITCH	X02.4	23
AUXILIARY INPUT 2	X02.7	24
EXTERNAL STOP	X04.2	25

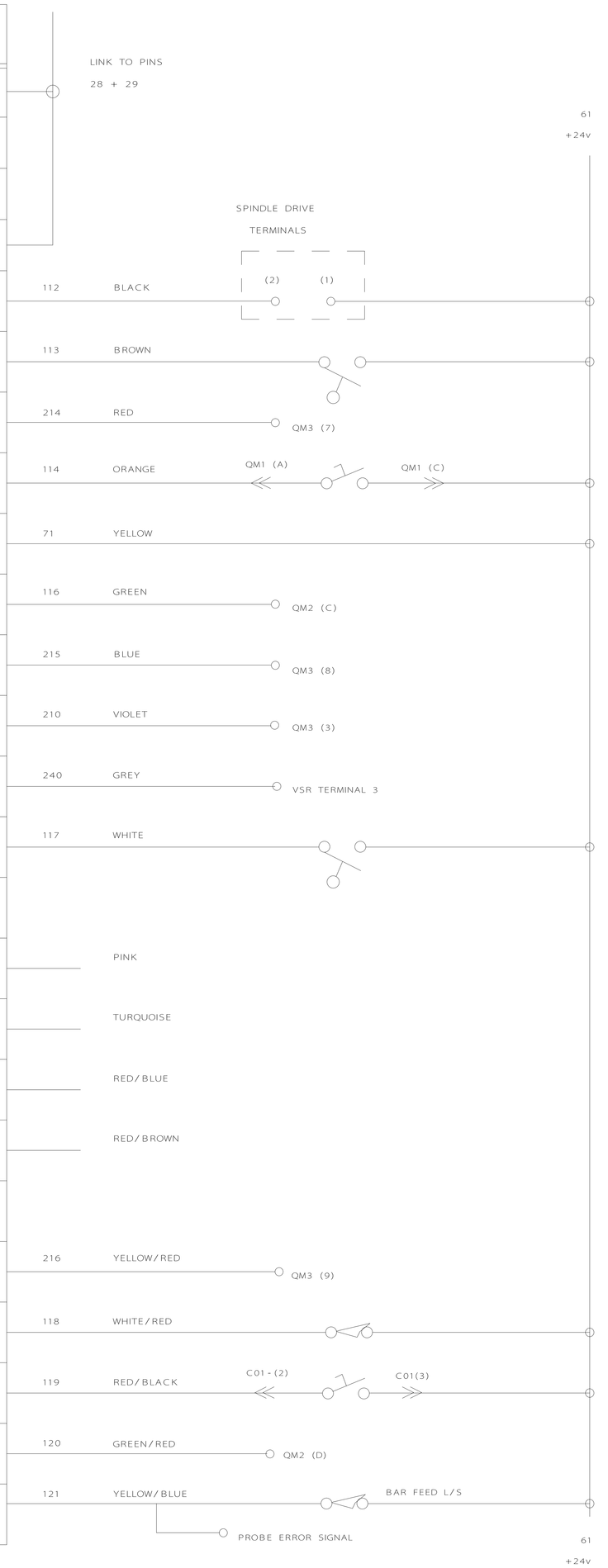

36 CORE SCREEN TO TERMINALS

ALL COLOURS USED

QM1 8 WAY SOCKET (FOOT SWITCH)

QM2 8 WAY SOCKET (AUXILIARIES)

QM3 24 WAY SOCKET (TOOLPOST - BARUFFALDI)

M18 CONTROL INPUTS

50 WAY
FEMALE
HONDA
CONNECTOR

DESCRIPTION	BIT	PIN
DOOR OPEN SWITCH	X04.5	26
TOOLPOST POSITION 1	X06.0	27
	COM2	28
	COM3	29
		30
		31
		32
	X00.0	33
X MOTOR THERMAL	X00.2	34
Z MOTOR THERMAL	X00.4	35
HYDRAULIC PRESSURE SWITCH A	X00.7	36
HYDRAULIC PRESSURE SWITCH B	X02.2	37
WORKSHIFT P/BUTTON	X02.5	38
DRIVE TRANS THERMAL	X04.0	39
CHUCK JAWS OPEN SENSOR	X04.3	40
CHUCK JAWS CLOSED SENSOR	X04.6	41
TOOLPOST POSITION 2	X06.1	42
TOOLPOST POSITION 4	X06.3	43
TOOLPOST POSITION 5	X06.5	44
TOOLPOST POSITION 6	X06.7	45
ZAE	X08.1	46
-MITX	X08.3	47
-MITZ	X08.5	48
SKIP	X08.7	49
		50

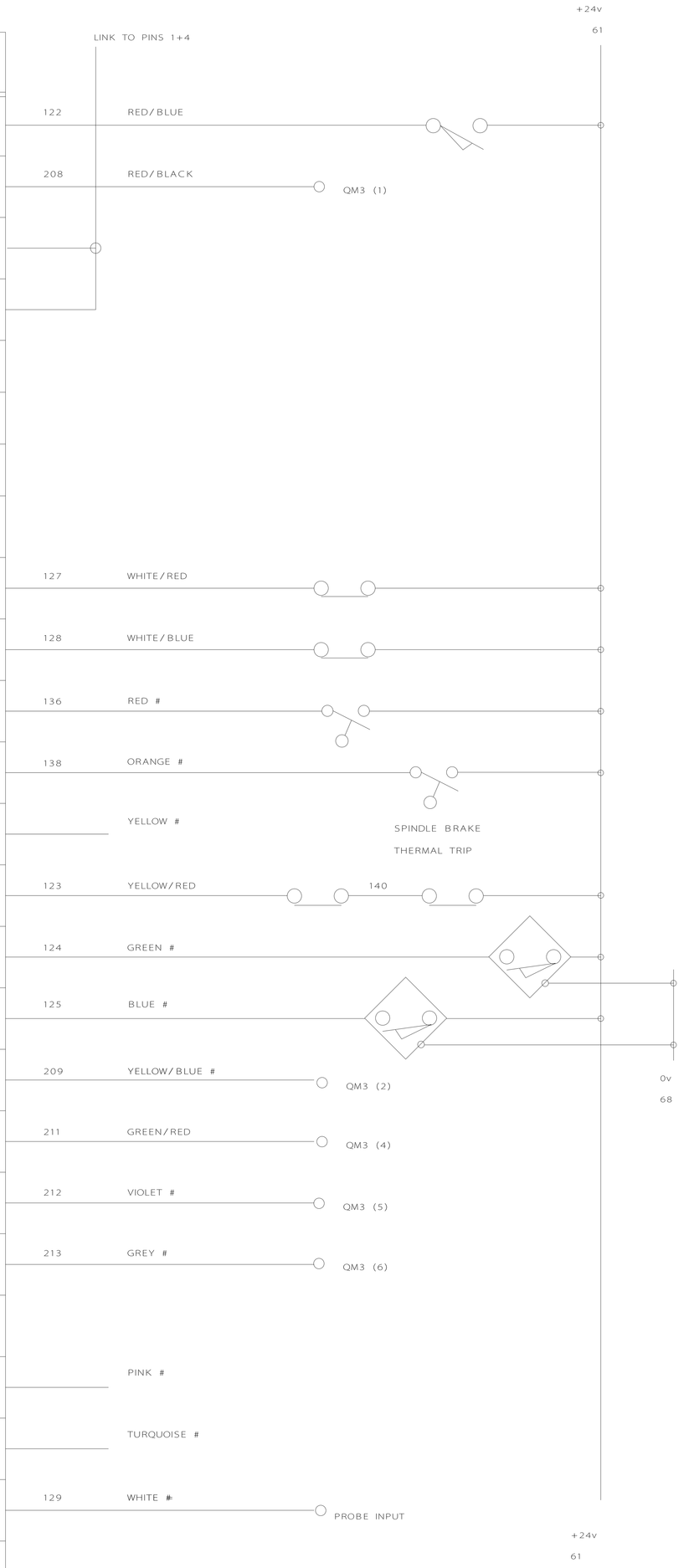

12 CORE SCREEN TO TERMINALS
** 2 CORE SCREEN TO TERMINALS
20 CORE SCREEN TO TERMINALS

QM1 8 WAY SOCKET (FOOT SWITCH)
QM2 8 WAY SOCKET (AUXILIARIES)
QM3 24 WAY SOCKET (TOOLPOST - BARUFFALDI)
VSR VOLTAGE SENSING RELAY

DENFORD MACHINE TOOLS LTD BRIGHOUSE WEST YORKSHIRE

DRN BY A McHENRY

DATE 07-10-91

A3 - 310547 A

CYCLONE OT-A
M18
CONTROL INPUTS

SHEET
OF

M18 CONTROL INPUTS

50 WAY
FEMALE
HONDA
CONNECTOR

DESCRIPTION	BIT	PIN
DOOR OPEN SWITCH	X04.5	26
TOOLPOST POSITION 1	X06.0	27
	COM2	28
	COM3	29
		30
		31
		32
	X00.0	33
X MOTOR THERMAL	X00.2	34
Z MOTOR THERMAL	X00.4	35
HYDRAULIC PRESSURE SWITCH A	X00.7	36
HYDRAULIC PRESSURE SWITCH B	X02.2	37
WORKSHIFT P/BUTTON	X02.5	38
DRIVE TRANS THERMAL	X04.0	39
CHUCK JAWS OPEN SENSOR	X04.3	40
CHUCK JAWS CLOSED SENSOR	X04.6	41
TOOLPOST POSITION 2	X06.1	42
TOOLPOST POSITION 4	X06.3	43
TOOLPOST POSITION 5	X06.5	44
TOOLPOST POSITION 6	X06.7	45
ZAE	X08.1	46
-MITX	X08.3	47
-MITZ	X08.5	48
SKIP	X08.7	49
		50

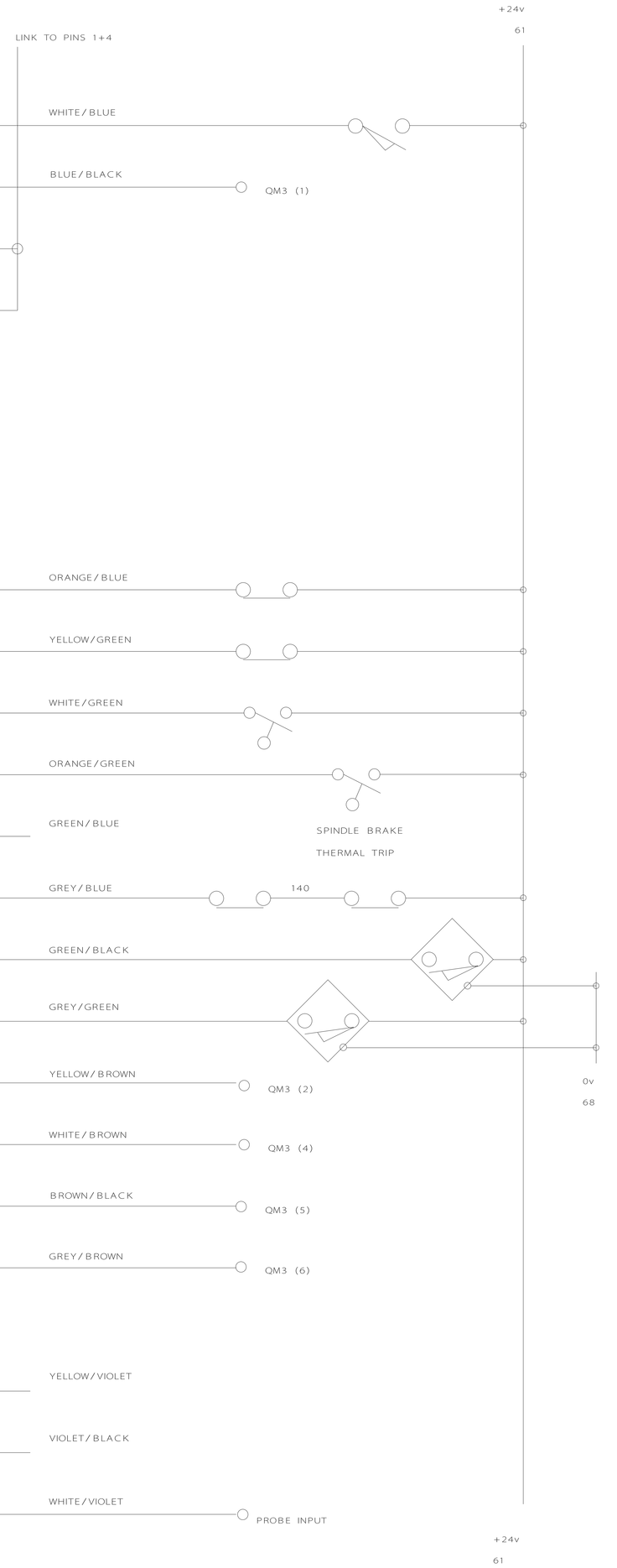

36 CORE SCREEN TO TERMINALS
ALL COLOURS ARE USED

QM1 8 WAY SOCKET (FOOT SWITCH)
QM2 8 WAY SOCKET (AUXILIARIES)
QM3 24 WAY SOCKET (TOOLPOST - BARUFFALDI)
VSR VOLTAGE SENSING RELAY

DENFORD MACHINE TOOLS LTD BRIGHOUSE WEST YORKSHIRE

DRN BY A McHENRY

DATE 8-10-91

A3 - 310547 B

CYCLONE OT-A
M18
CONTROL INPUTS

SHEET
OF

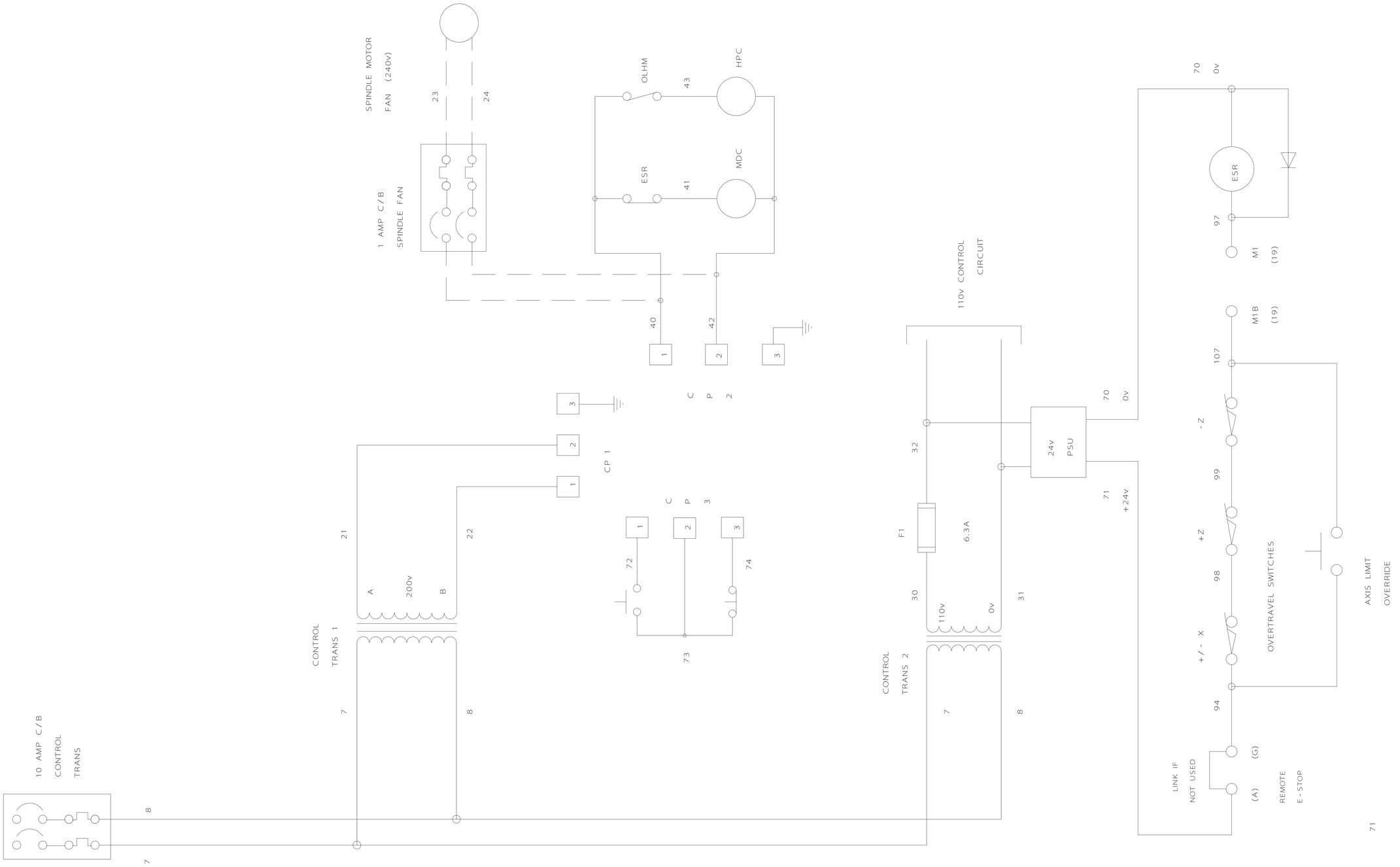

CYCLONE OT-A
E-STOP AND
CONTROL CIRCUIT

SHEET 2
OF

DENFORD MACHINE TOOLS LTD BRIGHOUSE WEST YORKSHIRE

DRN BY A McHENRY

DATE 21-5-92

A3- 310570 A

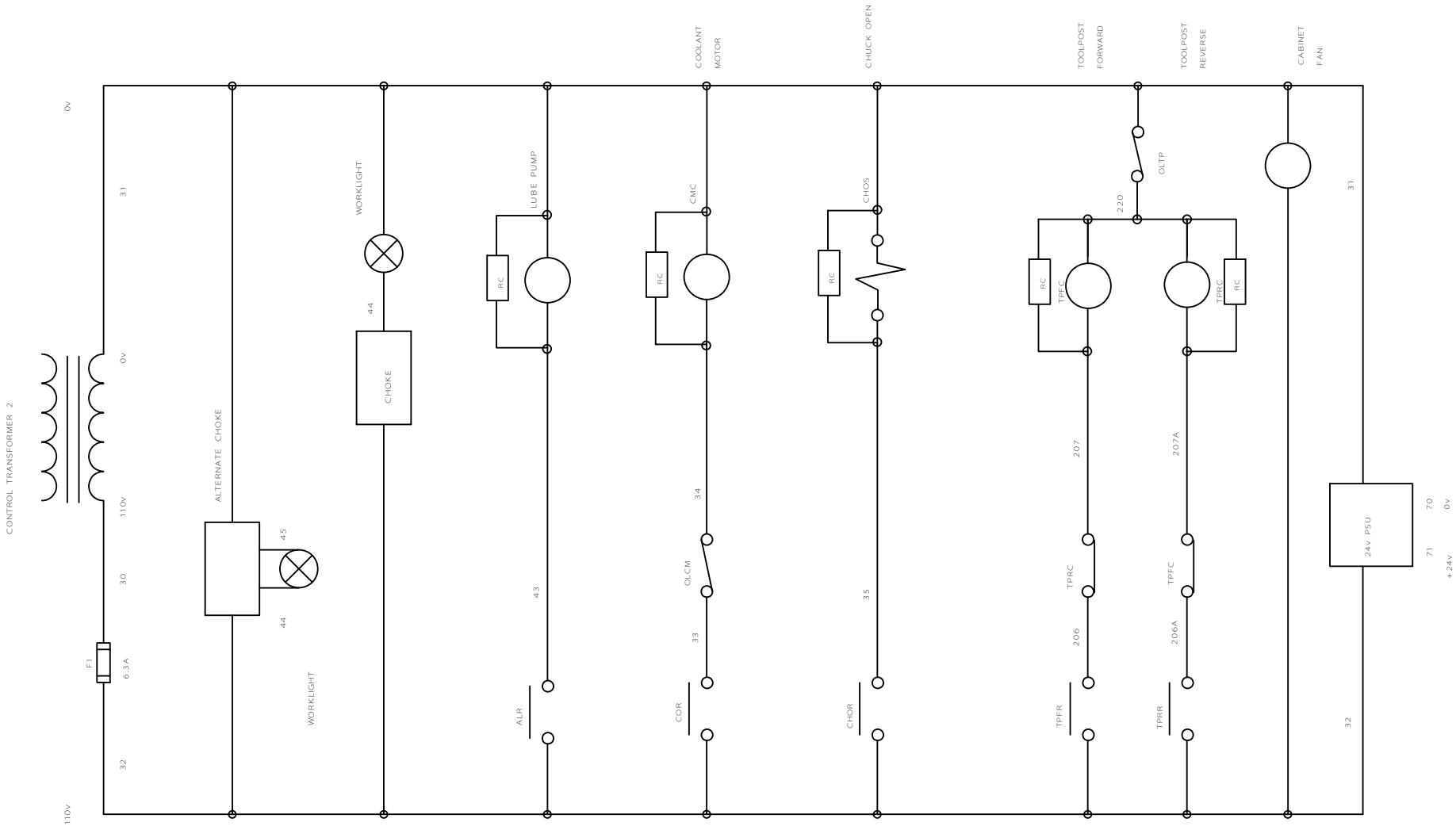

PNEUMATIC CHUCK AND TOOLPOST
ARE STANDARD
FOR OPTIONS SEE SHEET 3

CYCLONE 0T-A 110v SCHEMATIC (STANDARD EQUIP.)	SHEET 3 OF

DENFORD MACHINE TOOLS LTD BRIGHOUSE WEST YORKSHIRE	DRN BY A McHENRY	DATE 21-5-92	A3 - 310541 B

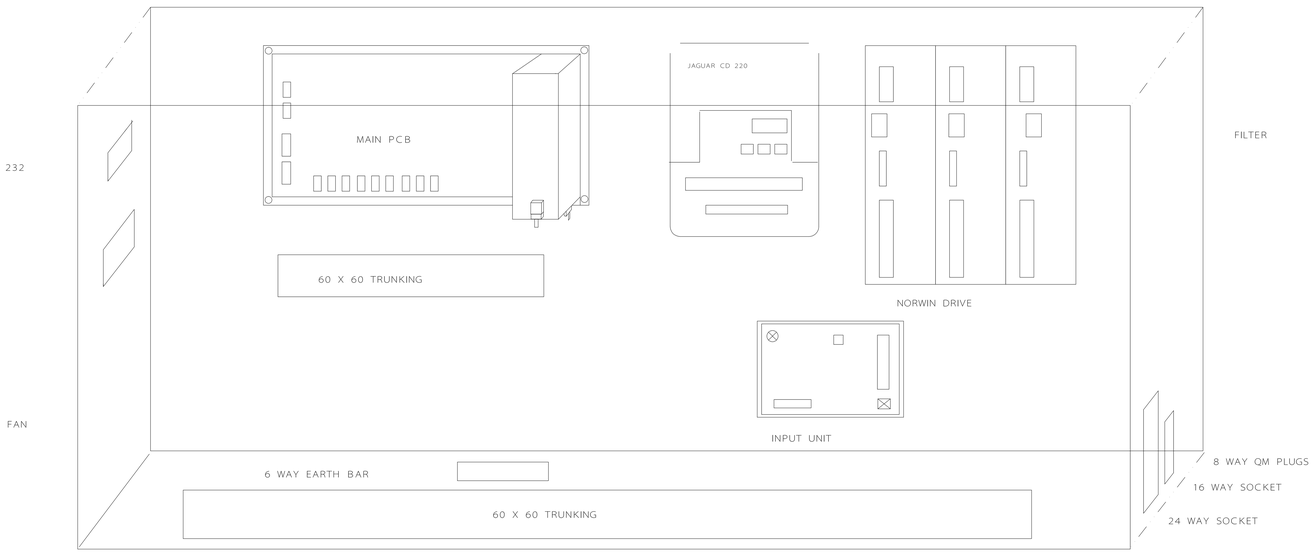

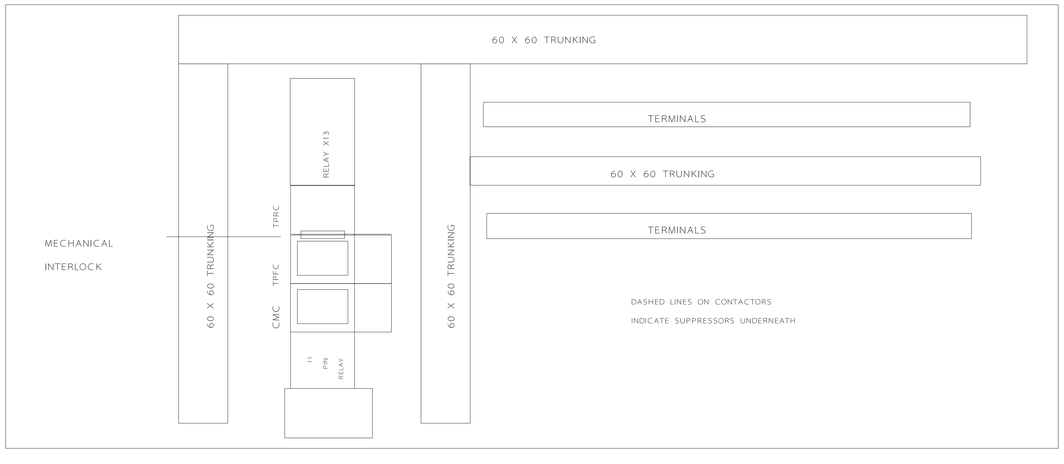

DIODE MODULE

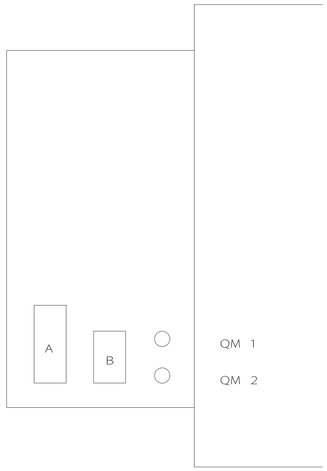

QM 1 8 WAY ROUND CONNECTOR
(FOOTSWITCH)

A	114
B	119
C	71
H	E

QM 1 8 WAY ROUND CONNECTOR
(AUXILIARIES)

A	71
B	70
C	116
D	120
E	157
F	163
G	94
H	E

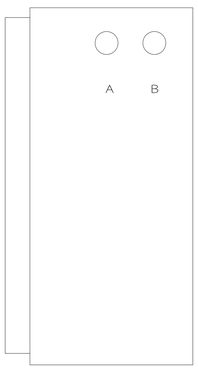

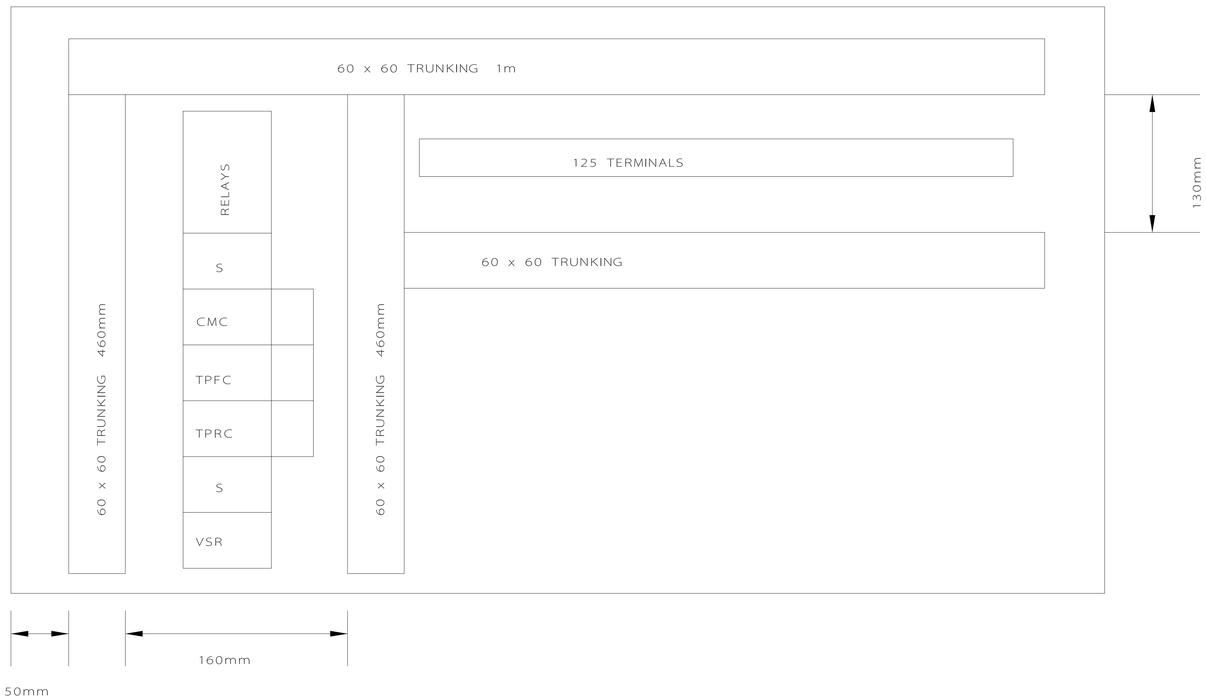

SHEET No

CYCLONE 0T - A
PANEL LAYOUT
(NEW DRIVES)

OF

DENFORD MACHINE TOOLS LTD BRIGHOUSE WEST YORKSHIRE

DRN BY A McHENRY

DATE

A3 -

CONTACTORS B9 - 30 - 01 - 110v

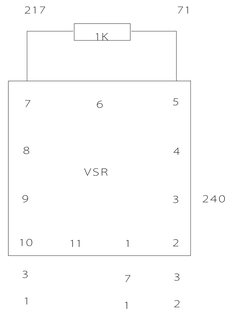

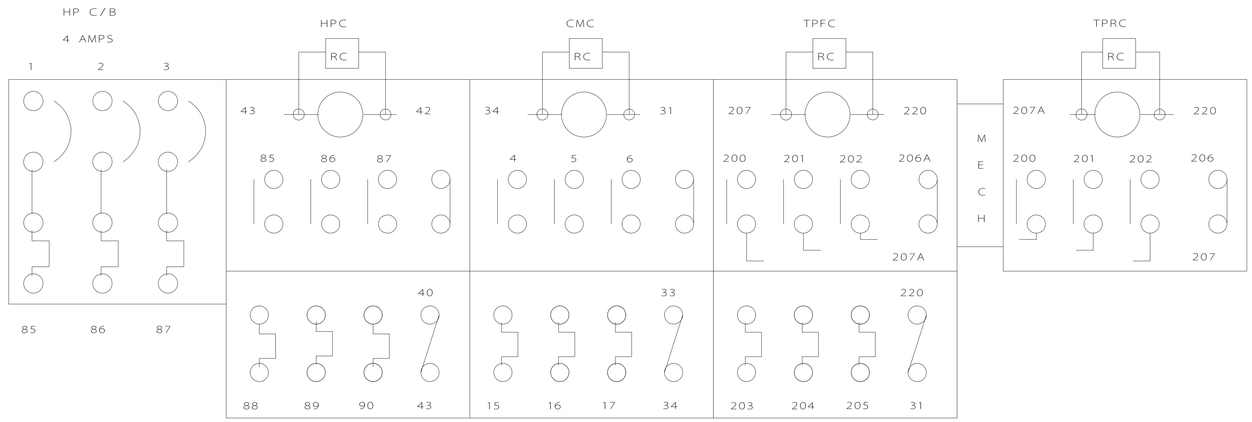

HP C/B	HYDRAULIC PUMP CIRCUIT BREAKER
HPC	HYDRAULIC PUMP CONTACTOR
CMC	COOLANT MOTOR CONTACTOR
TPFC	TOOLPOST FORWARD CONTACTOR
TPRC	TOOLPOST REVERSE CONTACTOR
COR	COOLANT ON RELAY
TPRR	TOOLPOST REVERSE RELAY
TRFR	TOOLPOST FORWARD RELAY
TPBR	TOOLPOST BRAKE RELAY
XDFR	X DRIVE FAULT RELAY
ZDFR	Z DRIVE FAULT RELAY
XER	X ENABLE RELAY
ZER	Z ENABLE RELAY
SFR	SPINDLE FORWARD RELAY
SRR	SPINDLE REVERSE RELAY
ALR	AXIS LUBE RELAY
ESR	EMERGENCY STOP RELAY
CHOR	CHUCK OPEN RELAY
CHCR	CHUCK CLOSE RELAY

| 1 | 1 | 1 | 1 | | |

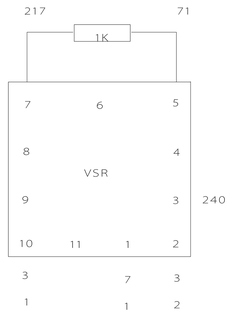

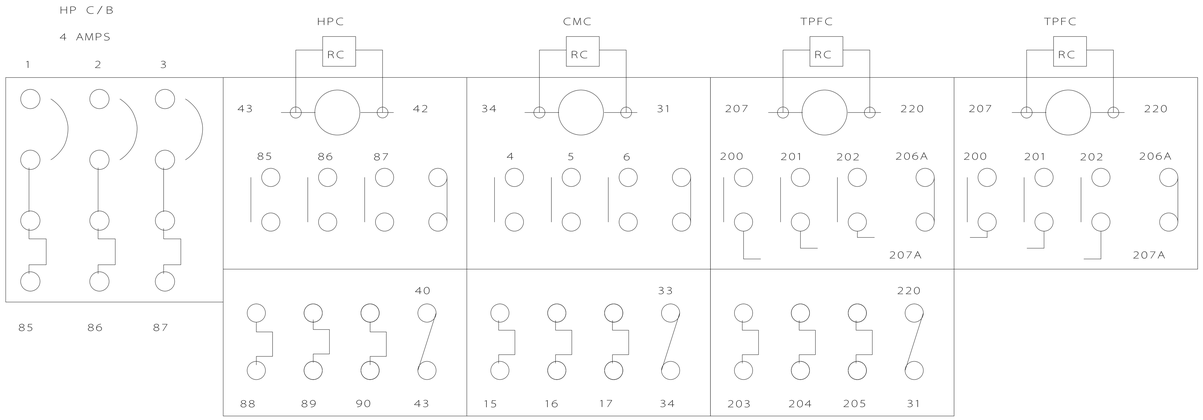

M L
E O
C C
H K

TPFC TOOLPOST FORWARD CONTACTOR
TPRC TOOLPOST REVERSE CONTACTOR
CMC COOLANT MOTOR CONTACTOR
COR COOLANT ON RELAY
TPFR TOOLPOST FORWARD RELAY
TPRR TOOLPOST REVERSE RELAY
XDFR X DRIVE FAULT RELAY
ZDFR Z DRIVE FAULT RELAY
XER X ENABLE RELAY
ZER Z ENABLE RELAY
SFR SPINDLE FORWARD RELAY
SRR SPINDLE REVERSE RELAY
ALR AXIS LUBE RELAY
ESR EMERGENCY STOP RELAY
CHOR CHUCK OPEN RELAY
CHCR CHUCK CLOSE RELAY
MDC MAIN DRIVES CONTACTOR
VSR VOLTAGE SENSING RELAY

| | | |

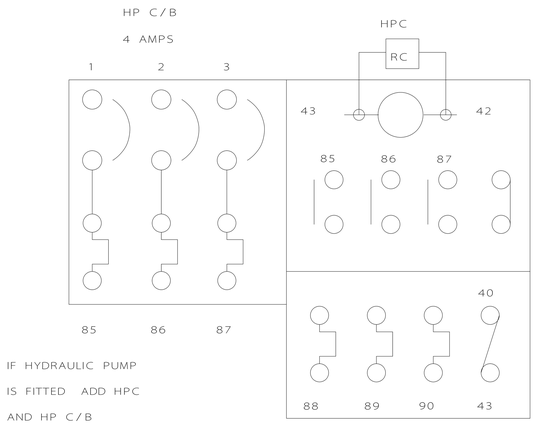

IF HYDRAULIC PUMP
IS FITTED ADD HPC
AND HP C/B

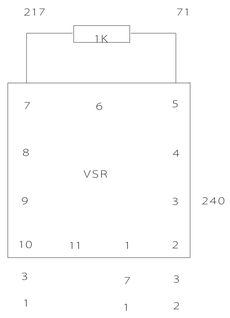

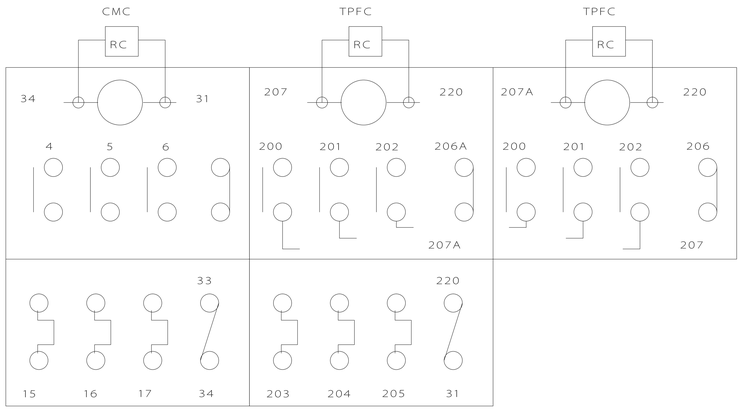

ALR	AXIS LUBE RELAY
CHCR	CHUCK CLOSE RELAY
CHOR	CHUCK OPEN RELAY
CMC	COOLANT MOTOR CONTACTOR
COR	COOLANT ON RELAY
DCR	DOOR CLOSE RELAY
DOR	DOOR OPEN RELAY
ESR	EMERGENCY STOP RELAY
HPC	HYDRAULIC PUMP CONTACTOR
HP C/B	HYDRAULIC PUMP CIRCUIT BREAKER
MDC	MAIN DRIVES CONTACTOR
SFR	SPINDLE FORWARD RELAY
SRR	SPINDLE REVERSE RELAY
TPBR	TOOLPOST BRAKE RELAY
TPFC	TOOLPOST FORWARD CONTACTOR
TPFR	TOOLPOST FORWARD RELAY
TPRC	TOOLPOST REVERSE CONTACTOR
TPRR	TOOLPOST REVERSE RELAY
VSR	VOLTAGE SENSING RELAY
XDFR	X DRIVE FAULT RELAY
XER	X ENABLE RELAY
ZDFR	Z DRIVE FAULT RELAY
ZER	Z ENABLE RELAY

| 1 | 1 | 1 |

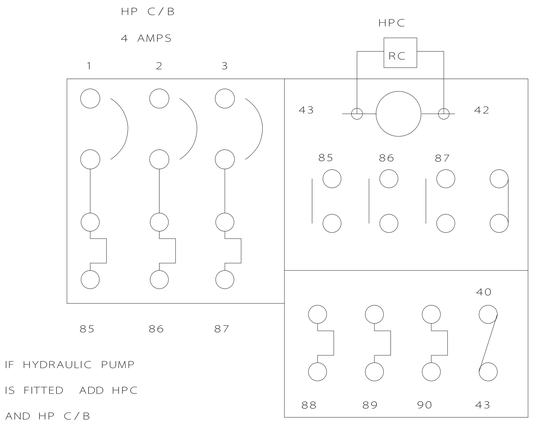

IF HYDRAULIC PUMP
IS FITTED ADD HPC
AND HP C/B

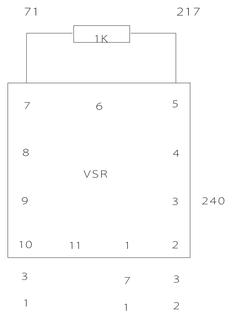

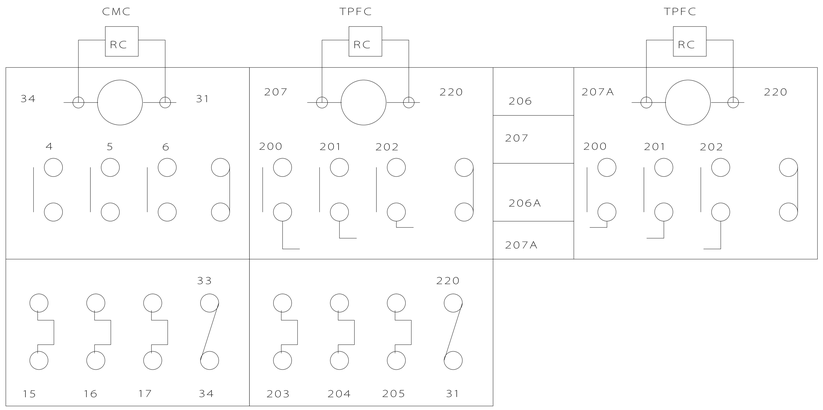

ALR	AXIS LUBE RELAY
CHCR	CHUCK CLOSE RELAY
CHOR	CHUCK OPEN RELAY
CMC	COOLANT MOTOR CONTACTOR
COR	COOLANT ON RELAY
DCR	DOOR CLOSE RELAY
DOR	DOOR OPEN RELAY
ESR	EMERGENCY STOP RELAY
HPC	HYDRAULIC PUMP CONTACTOR
HP C/B	HYDRAULIC PUMP CIRCUIT BREAKER
MDC	MAIN DRIVES CONTACTOR
QER	QUILL EXTEND RELAY
SFR	SPINDLE FORWARD RELAY
SRR	SPINDLE REVERSE RELAY
TPBR	TOOLPOST BRAKE RELAY
TPFC	TOOLPOST FORWARD CONTACTOR
TPFR	TOOLPOST FORWARD RELAY
TPRC	TOOLPOST REVERSE CONTACTOR
TPRR	TOOLPOST REVERSE RELAY
VSR	VOLTAGE SENSING RELAY
XDFR	X DRIVE FAULT RELAY
XER	X ENABLE RELAY
ZDFR	Z DRIVE FAULT RELAY
ZER	Z ENABLE RELAY

| | | |

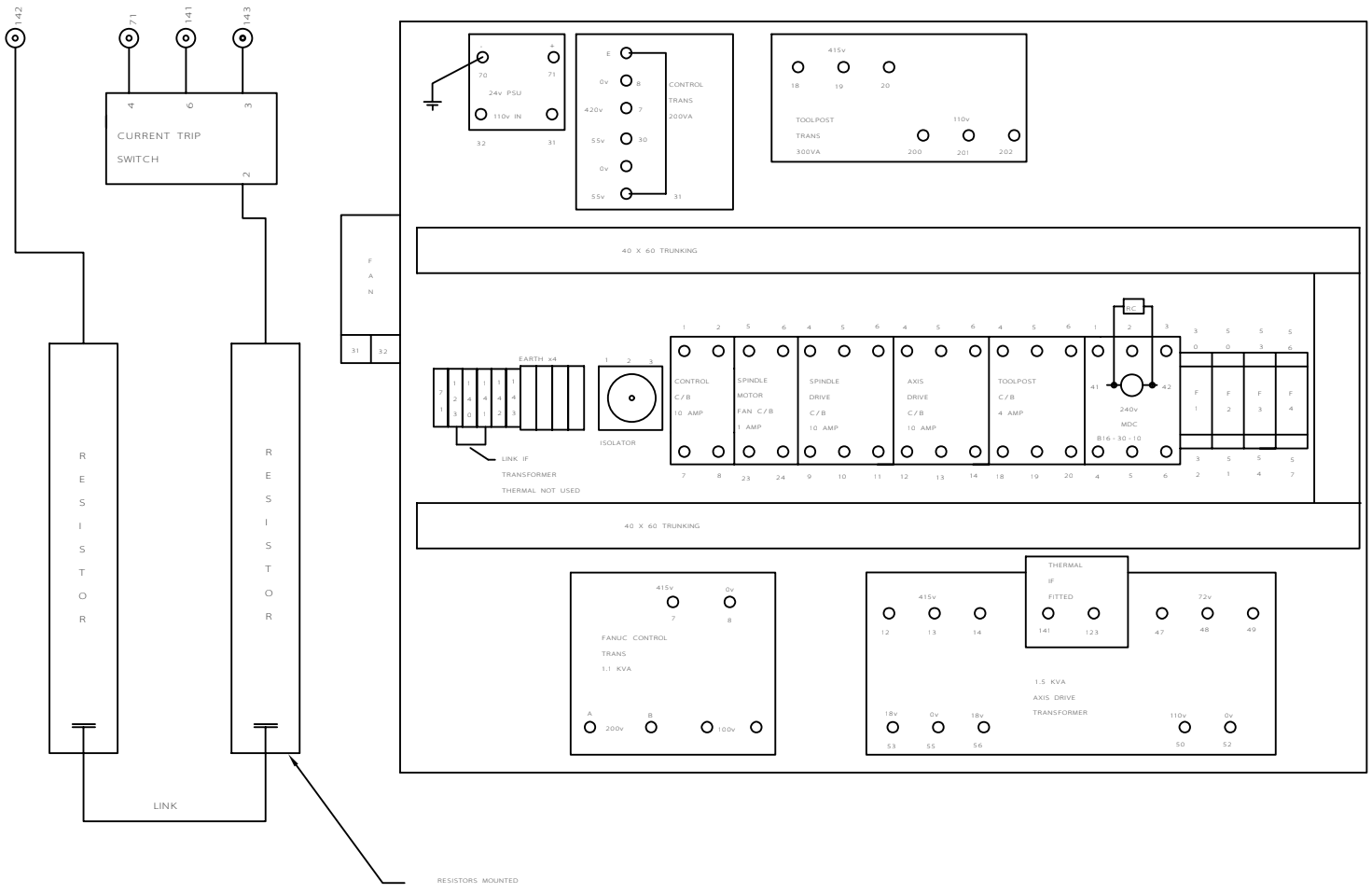

B

16 WAY

SOCKET

1	
2	4
3	5
4	6
5	1
6	9
7	10
8	11
9	2
10	21
11	22
12	3
13	41
14	42
15	142
16	143

A

24 WAY

SOCKET

1	31
2	32
3	
4	47
5	48
6	49
7	23
8	24
9	51
10	52
11	
12	54
13	55
14	57
15	
16	70
17	71
18	
19	123
20	
21	200
22	201
23	202
24	

SHEET 6

OF

CYCLONE OTA

NON FANUC DRIVES

TRANSFORMER BOX

DENFORD MACHINE TOOLS LTD BRIGHOUSE WEST YORKSHIRE

DRN BY A. NEWSOME

DATE 25-9-90

A3- 310543 B

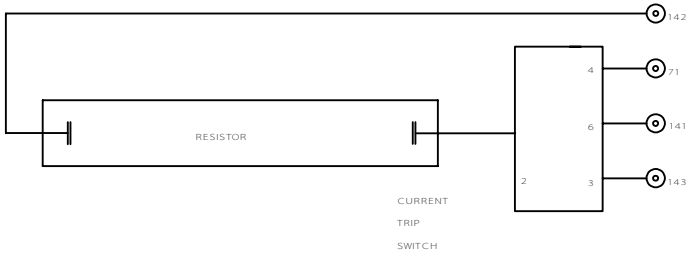

3 0	4 7	4 8	4 9	5 0	5 1	5 2	5 3	5 5	5 6	5 8
A	A	A	A	A	A	A	A	A	A	A
F 1	F 2	F 3	F 4	F 5	F 6	F 7	F 8	F 9	F 10	F 11
3 2	4 7	4 8	4 9	5 0	5 1	5 2	5 3	5 5	5 6	5 8

B

16 WAY

SOCKET

1	1
2	2
3	3
4	4
5	5
6	6
7	21
8	22
9	41
10	42
11	
12	59 BLK 2.5mm
13	60 BLK 2.5mm
14	61 BLK 2.5mm
15	142
16	143

A

24 WAY

SOCKET

1	23
2	24
3	31
4	32
5	47
6	48
7	49
8	50
9	51
10	52
11	
12	53 RED 1mm
13	54 RED 1mm
14	55 RED 1mm
15	56 RED 1mm
16	57 RED 1mm
17	58 RED 1mm
18	70 BLE 1.5mm
19	71 BLE 1.5mm
20	123 BLE .5mm
21	
22	200
23	201
24	202

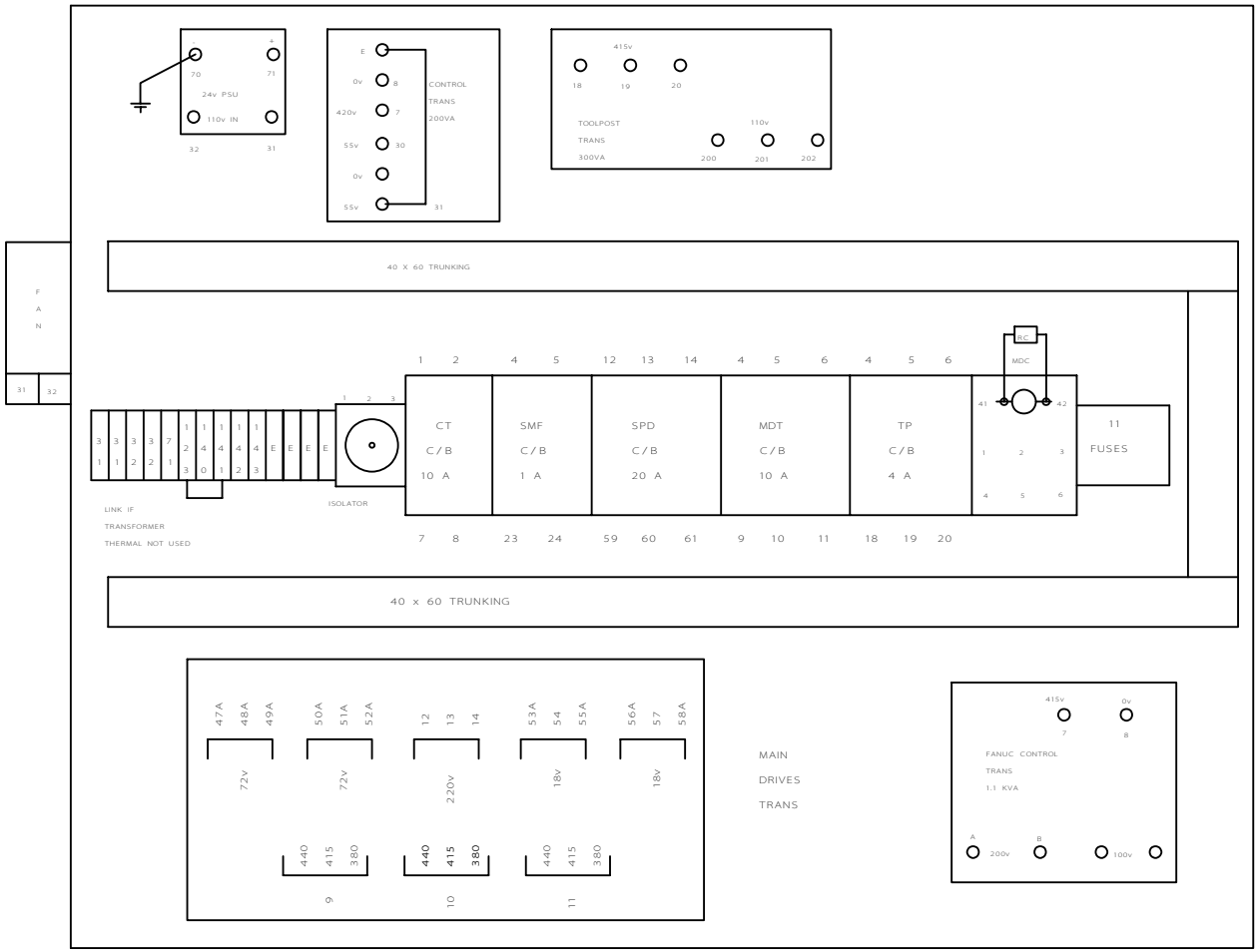

ALL WIRING IS IN
1.5mm BLACK
UNLESS NOTED
OTHERWISE

CT	CONTROL TRANSFORMER
SMF	SPINDLE MOTOR FAN
SPD	SPINDLE DRIVE
MDT	MAIN DRIVES TRANS
TP	TOOLPOST

SHEET 6

OF

CYCLONE OTA
NON FANUC DRIVES
TRANSFORMER BOX

DENFORD MACHINE TOOLS LTD BRIGHOUSE WEST YORKSHIRE

DRN BY A McHENRY

DATE 6-1-92

A3 - 310543 C

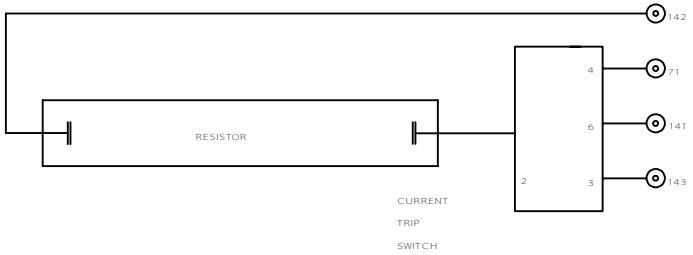

3 0	4 7	4 8	4 9	5 0	5 1	5 2	5 3	5 5	5 6	5 8
A	A	A	A	A	A	A	A	A	A	A
F 1	F 2	F 3	F 4	F 5	F 6	F 7	F 8	F 9	F 10	F 11
3 2	4 7	4 8	4 9	5 0	5 1	5 2	5 3	5 5	5 6	5 8

B

16 WAY

SOCKET

1	1	
2	2	
3	3	
4	4	
5	5	
6	6	
7	21	
8	22	
9	41	
10	42	
11		
12	59	BLK 2.5mm
13	60	BLK 2.5mm
14	61	BLK 2.5mm
15	142	
16	143	

A

24 WAY

SOCKET

1	23	
2	24	
3	31	
4	32	
5	47	
6	48	
7	49	
8	50	
9	51	
10	52	
11		
12	53	RED 1mm
13	54	RED 1mm
14	55	RED 1mm
15	56	RED 1mm
16	57	RED 1mm
17	58	RED 1mm
18	70	BLE 1.5mm
19	71	BLE 1.5mm
20	123	BLE .5mm
21		
22	200	
23	201	
24	202	

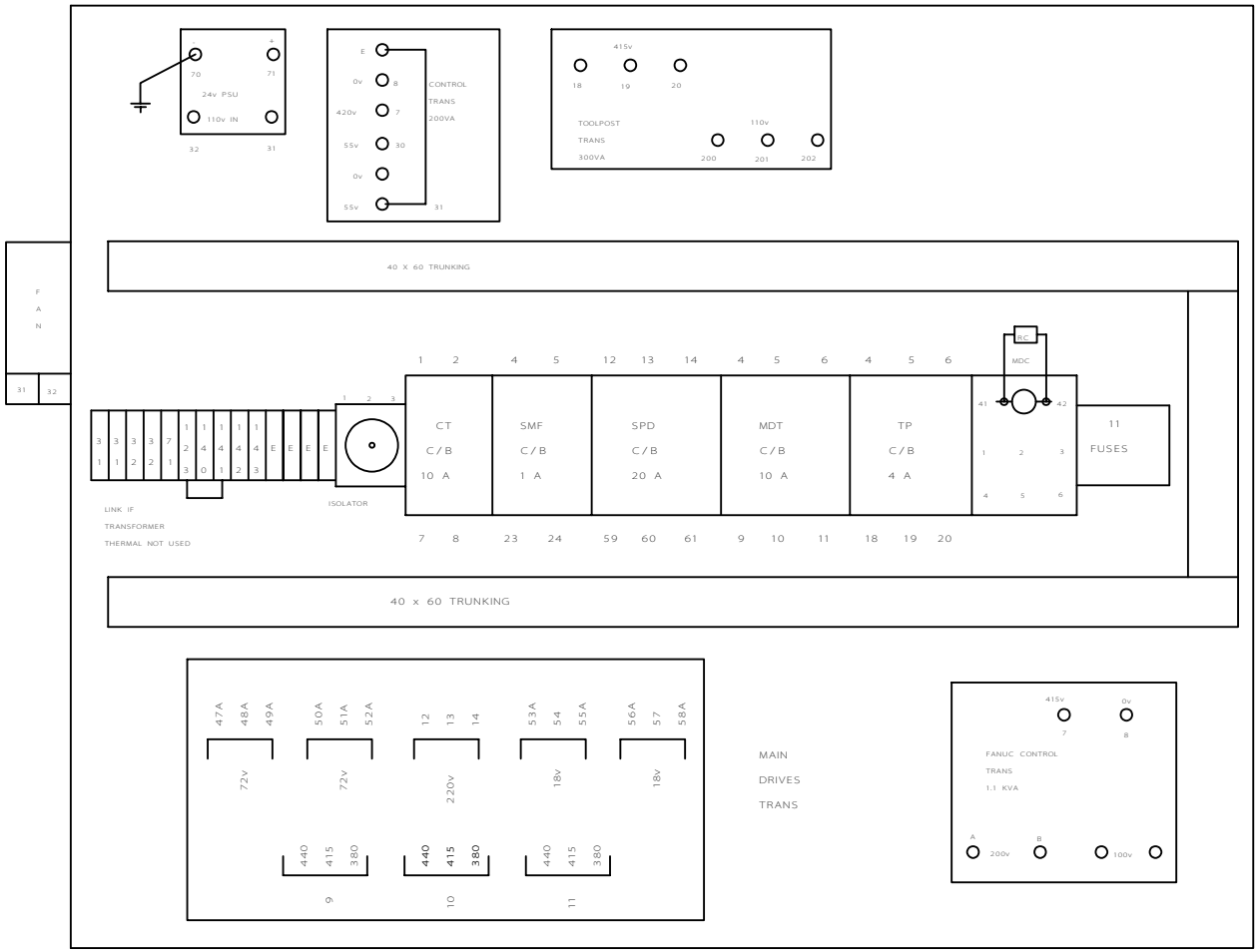

ALL WIRING IS IN
1.5mm BLACK
UNLESS NOTED
OTHERWISE

CT	CONTROL TRANSFORMER
SMF	SPINDLE MOTOR FAN
SPD	SPINDLE DRIVE
MDT	MAIN DRIVES TRANS
TP	TOOLPOST

SHEET 6

OF

CYCLONE OTA
NON FANUC DRIVES
TRANSFORMER BOX

DENFORD MACHINE TOOLS LTD BRIGHOUSE WEST YORKSHIRE

DRN BY A McHENRY

DATE 6-1-92

A3- 310543 D

CT	CONTROL TRANSFORMER
SMF	SPINDLE MOTOR FAN
SPD	SPINDLE DRIVE
ADT	AXIS DRIVES TRANS
TP	TOOLPOST

30	47A	48A	50A	51A	53A	54	55A	56A	57	58A
F1	F2	F3	F4	F5	F6	F7	F8	F9		
32	72v		72v		18v			18v		

B

16 WAY

SOCKET

1	1	
2	2	
3	3	
4	4	
5	5	
6	6	
7	21	
8	22	
9	41	
10	42	
11		
12	59	BLK 2.5mm
13	60	BLK 2.5mm
14	61	BLK 2.5mm
15		
16		

A

24 WAY

SOCKET

1	23	
2	24	
3	31	
4	32	
5	47	
6	48	
7		
8	50	
9	51	
10		
11		
12	53	RED 1mm
13	54	RED 1mm
14	55	RED 1mm
15	56	RED 1mm
16	57	RED 1mm
17	58	RED 1mm
18	70	BLE 1.5mm
19	71	BLE 1.5mm
20	123	BLE .5mm
21		
22	200	
23	201	
24	202	

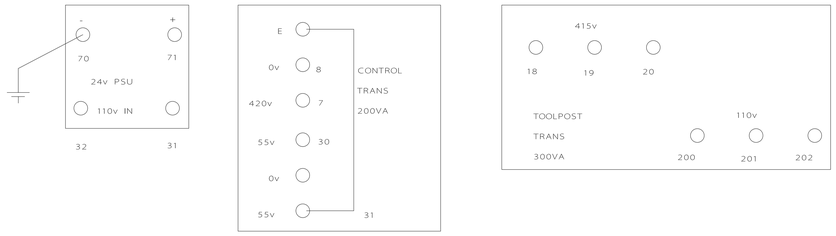

CYCLONE OTA NON FANUC DRIVES TRANSFORMER BOX	SHEET 6	
	OF	

DENFORD MACHINE TOOLS LTD BRIGHOUSE WEST YORKSHIRE	DRN BY A McHENRY	DATE 6-1-92	A3- 310543 E

CT	CONTROL TRANSFORMER
SMF	SPINDLE MOTOR FAN
SPD	SPINDLE DRIVE
ADT	AXIS DRIVES TRANS
TP	TOOLPOST

30	47A	48A	49A	50A	51A	52A	53A	54	55A	56A	57	58A
F1	F2	F3	F4	F5	F6	F7	F8	F9	F10	F11		
32	47	48	49	50	51	52	53	54	55	56	57	58

B

16 WAY

SOCKET

1	1	
2	2	
3	3	
4	4	
5	5	
6	6	
7	21	
8	22	
9	41	
10	42	
11		
12	59	BLK 2.5mm
13	60	BLK 2.5mm
14	61	BLK 2.5mm
15		
16		

A

24 WAY

SOCKET

1	23	
2	24	
3	31	
4	32	
5	47	
6	48	
7	49	
8	50	
9	51	
10	52	
11		
12	53	RED 1mm
13	54	RED 1mm
14	55	RED 1mm
15	56	RED 1mm
16	57	RED 1mm
17	58	RED 1mm
18	70	BLE 1.5mm
19	71	BLE 1.5mm
20	123	BLE .5mm
21		
22	200	
23	201	
24	202	

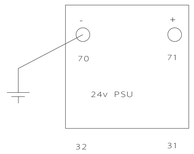

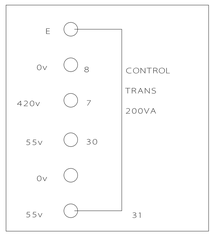

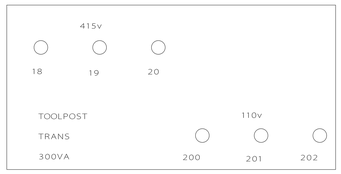

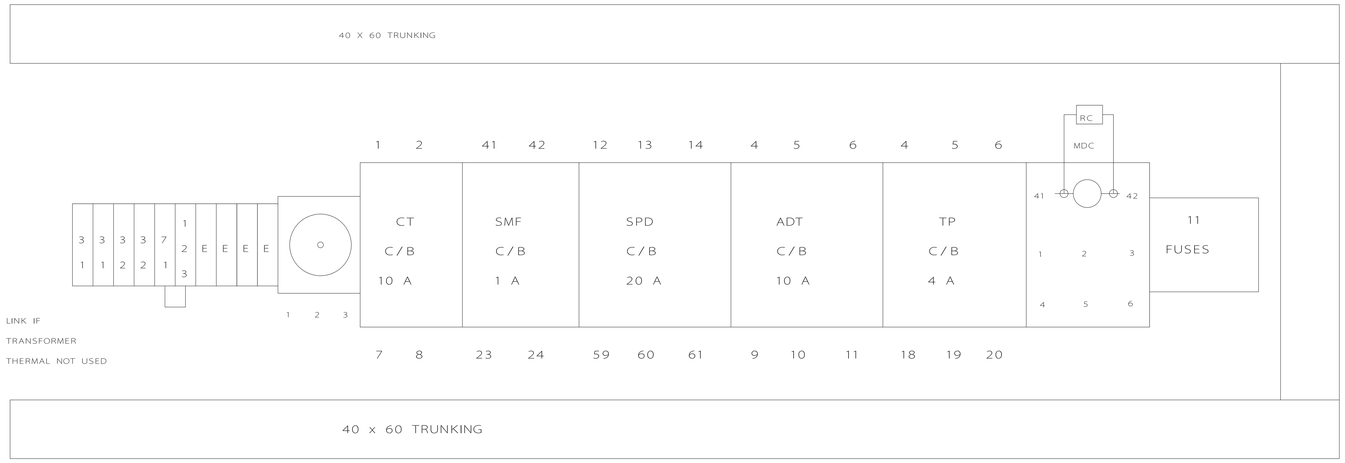

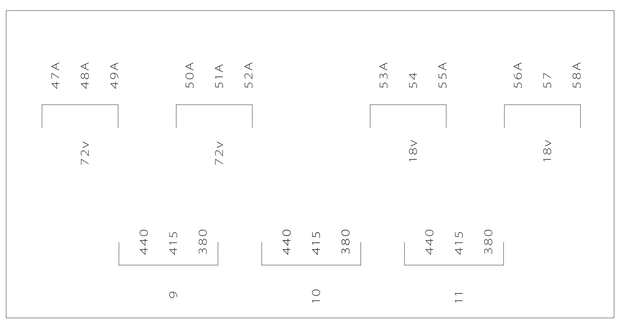

AXIS

DRIVES

TRANS

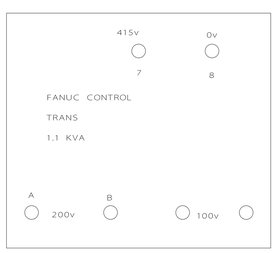

ALL WIRING IS IN

1.5mm BLACK

UNLESS NOTED

OTHERWISE

CYCLONE OTA

TRANSFORMER BOX

(240v MOTOR FAN)

(KEB SPINDLE DRIVE)

SHEET 7

OF

DENFORD MACHINE TOOLS LTD BRIGHOUSE WEST YORKSHIRE

DRN BY A McHENRY

DATE 23-5-92

A3- 310543 F

SHEET 11 BARUFFALDI TOOLPOST WIRING DIAGRAM A3 - 310557

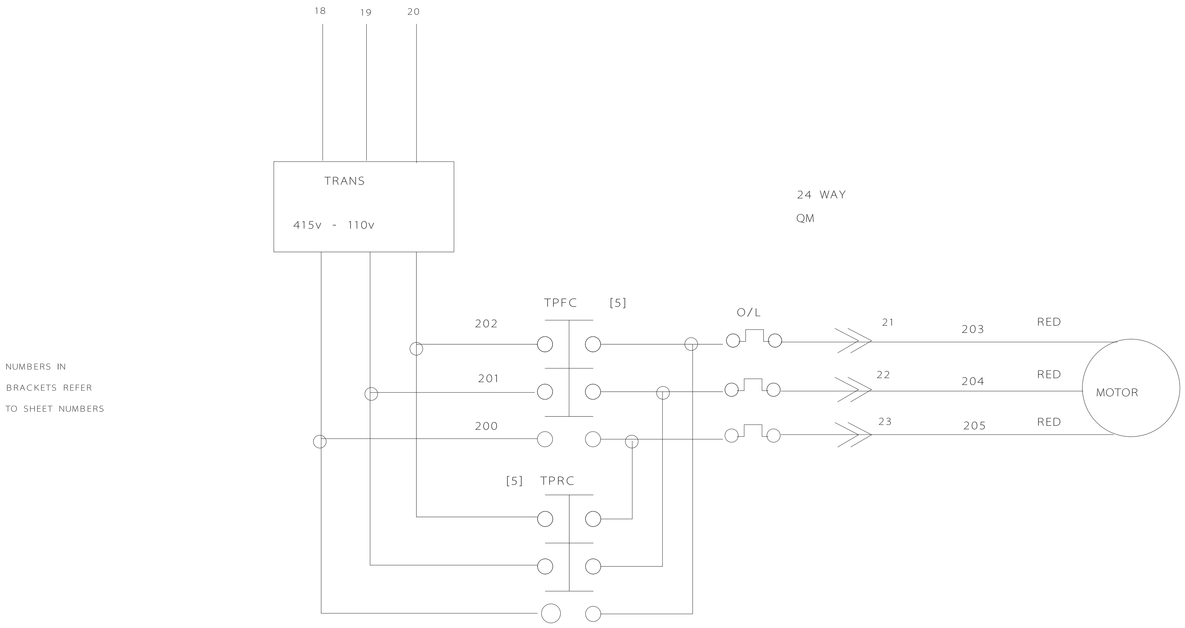

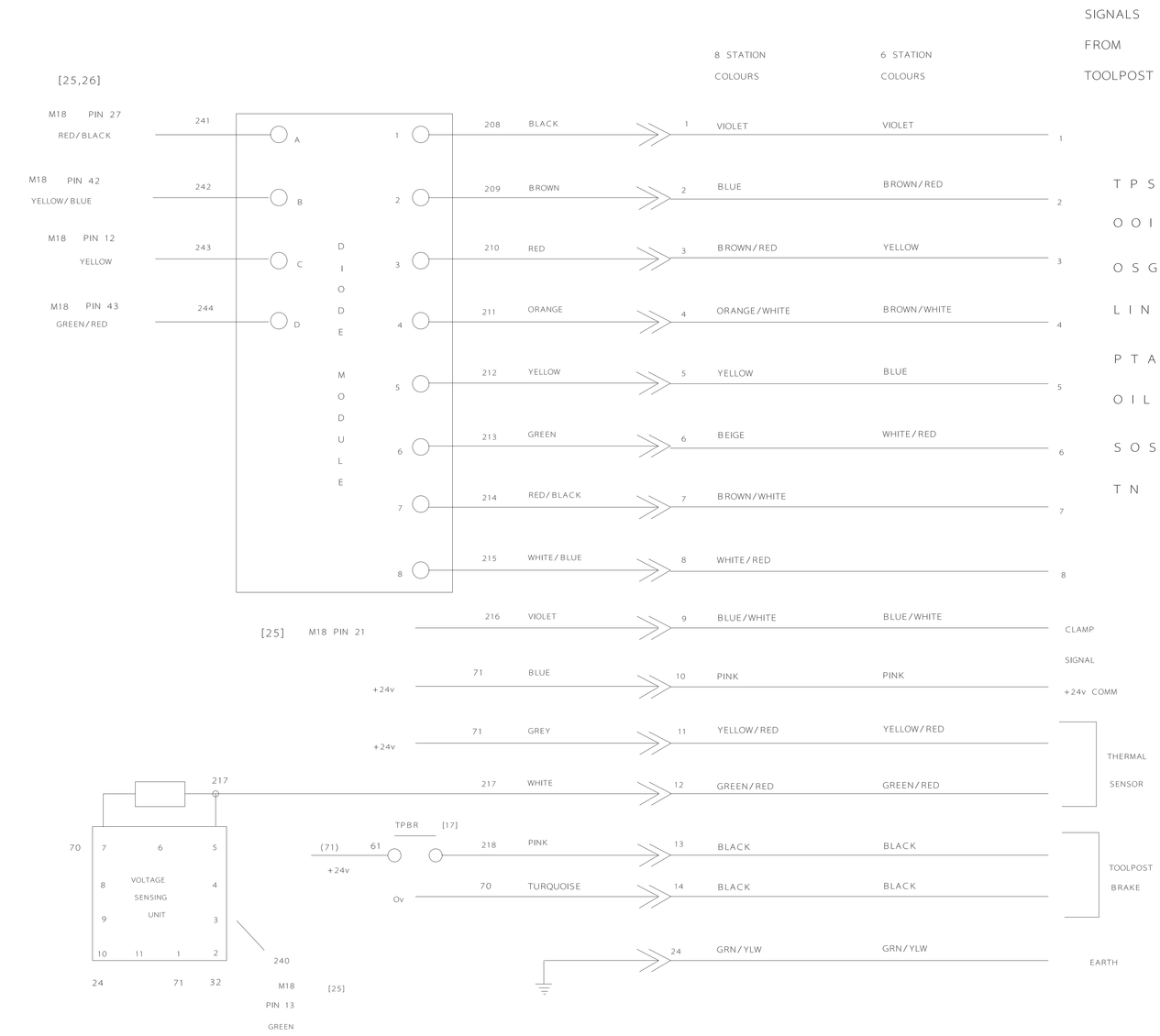

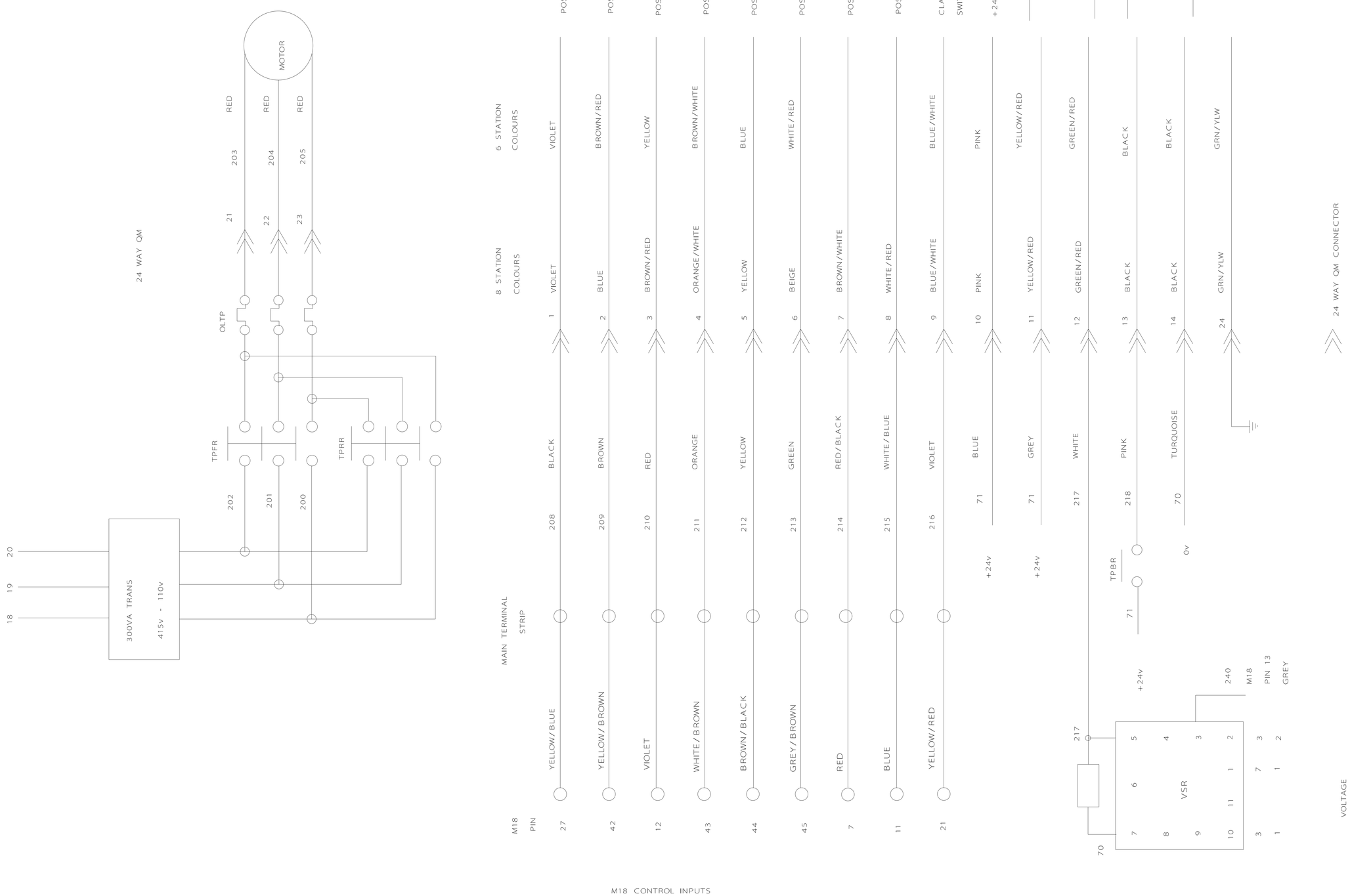

SHEET			
CYCLONE 0T-A BARUFFALDI TURRET WIRING DIAGRAM	OF		
IFORD MACHINE TOOLS LTD BRIGHOUSE WEST YORKSHIRE	DRN BY A McHENRY	DATE 28-11-91	A3- 310557 A

SHEET 12

SAUTER TOOLOST WIRING DIAGRAM A3 - 310549

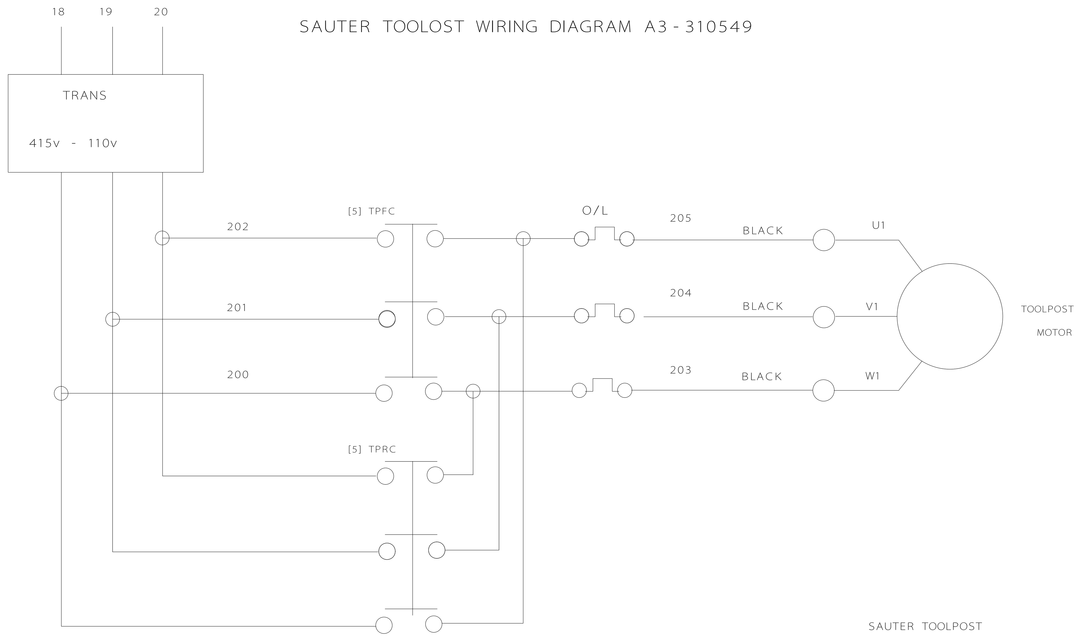

SAUTER TOOLPOST SIGNALS

[26]	M18 PIN 27 RED/BLACK	241	BLACK	1	POSITION BIT 1
[26]	M18 PIN 42 YELLOW/BLUE	242	BROWN	2	POSITION BIT 2
[25]	M18 PIN 12 YELLOW	243	RED	3	POSITION BIT 3
[26]	M18 PIN 43 GREEN/RED	244	ORANGE	4	POSITION BIT 4
[26]	M18 PIN 45 GREY	246	YELLOW	6	STROBE
				7	PARITY CHECK
[26]	M18 PIN 44 VIOLET	245	BLUE	8	PRE-INDEXING SENSOR
[25]	M18 PIN 21	216	VIOLET	10	TURRET CLAMPED SIGNAL
0v		70	GREY	11	
+24v		71	WHITE	12	+24v COMM
				14	THERMAL PROBE
		217	PINK	15	
+24v	TPBR [17] 71	218	TURQUOISE	16	BRAKE
				17	
				-	EARTH

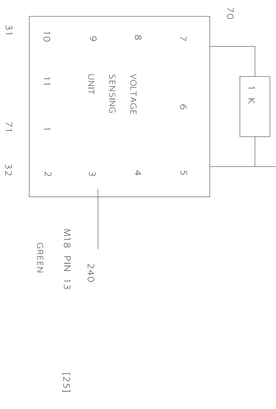

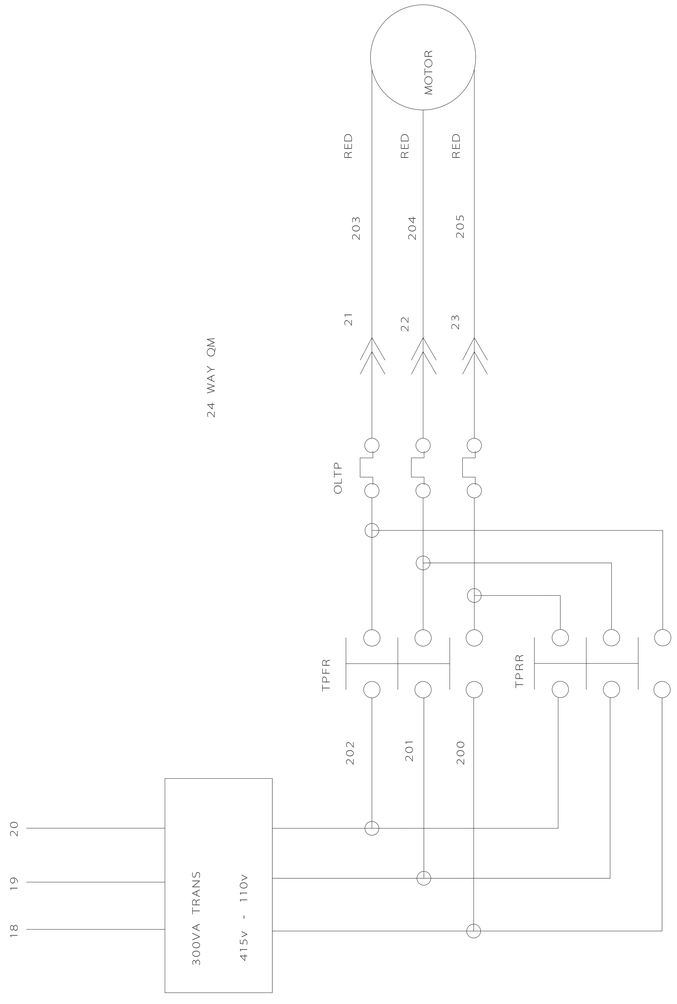

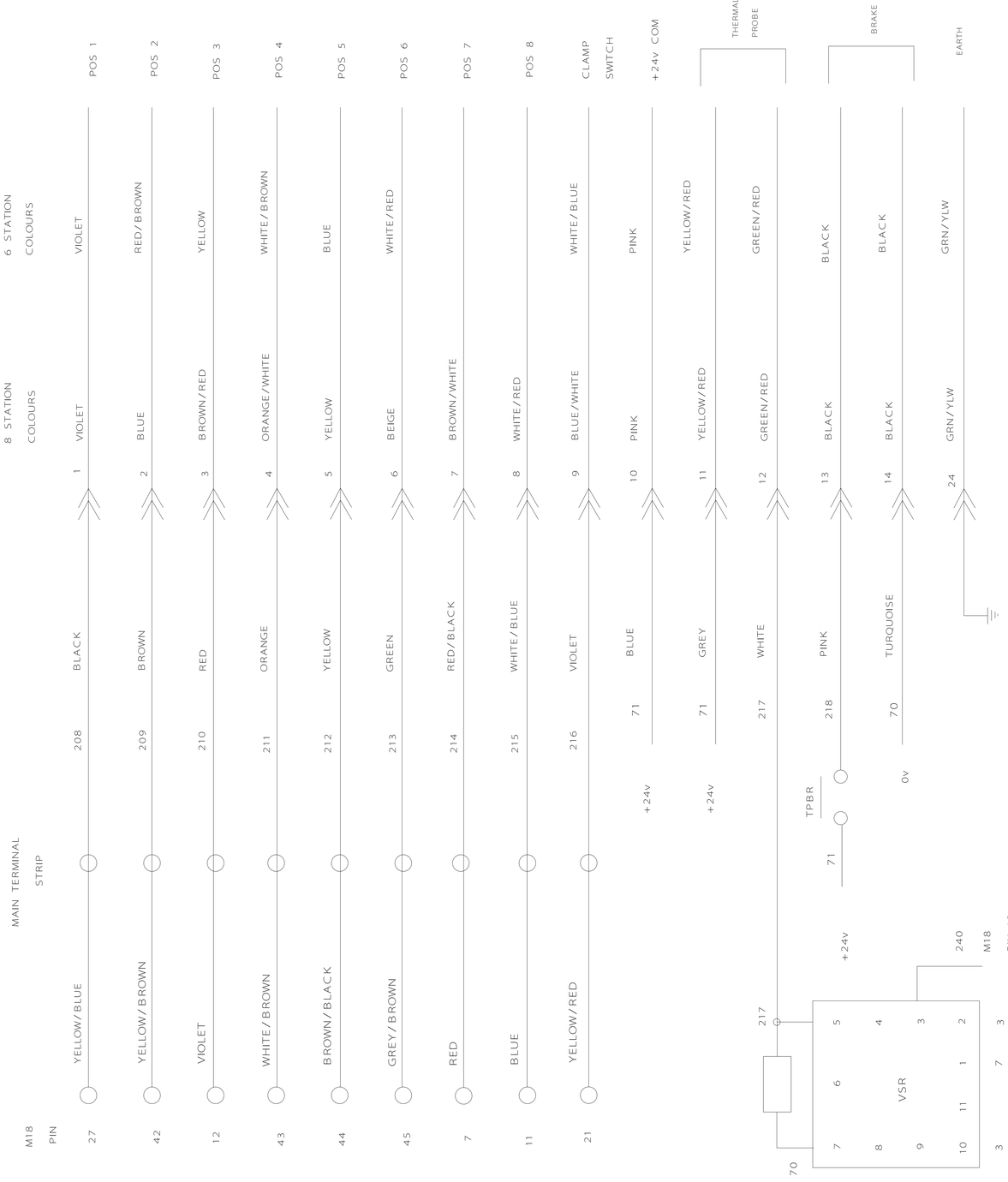

DENFORD MACHINE TOOLS LTD BRIGHOUSE WEST YORKSHIRE	DRN BY A McHENRY	DATE 3-3-98	A3- 310557 C

CYCLONE 0T-A
BARUFFALDI TURRET
WIRING DIAGRAM

SHEET

OF

SHEET 6 LIMIT SWITCH AND SOLENOID WIRING A3 - 310551

[10,15]

SINGLE SWITCH

-Z O/T [10,15]

RED BLUE

107 99

2 CORE SCREEN

DOUBLE SWITCH

+Z O/T [12,15] Z DATUM [14]

RED BLUE YELLOW GREEN

98 99 71 111

4 CORE SCREEN

DOUBLE SWITCH

X DATUM [14] X+/- OT [10,15]

[10]

YELLOW GREEN RED BLUE

110 71 71 98

4 CORE SCREEN

LUBE PUMP [10]

2 CORE + EARTH

BLUE 31

BROWN 43

COOLANT PUMP [9]

3 CORE + EARTH

BLACK 15

BROWN 16

BLUE 17

LUBE FLOAT SWITCH [25]

2 CORE SCREEN

BLUE 117

RED 71

NUMBERS IN BRACKETS REFER TO SHEET NUMBERS

STANDARD DOOR SWITCH [25]

IF POWER DOOR FITTED [26]

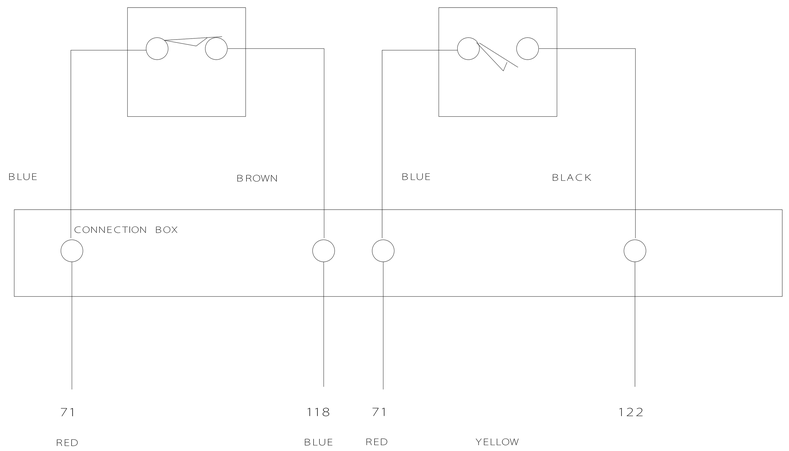

SOLENOIDS [10]

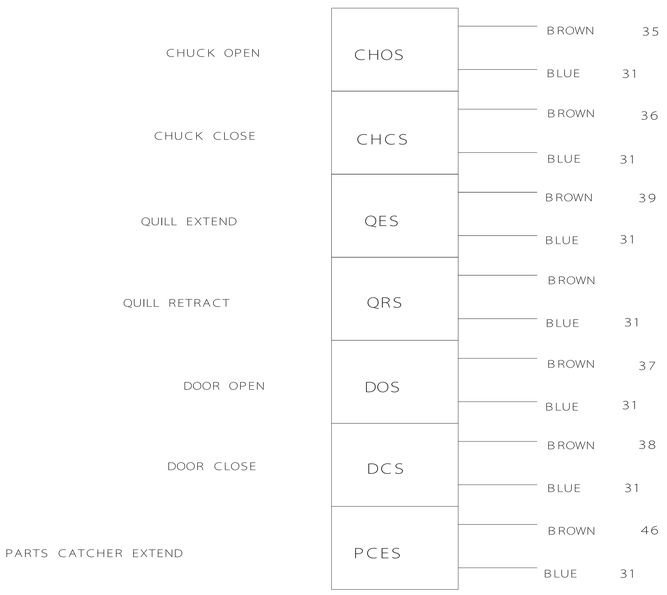

2 CORE AND EARTH FOR EACH SOLENOID