SPRINT Electric

Rudford Industrial Estate
Ford, Arundel, West Sussex
Great Britain, BN18 0BE

TEL. (0903) 730000
FAX. (0903) 730893

1 Introduction
2 Dimensions and typical control circuit
3 Typical applications
4 Terminal specification and block diagram
5 Installation and commissioning
6 Customer presets and log
7 Trouble shooting guide
8 Detailed specification

Introduction. Models 400, 800, 1200

SPRINT Electric offers a family of D.C. THYRISTOR drive modules all with the same features and terminals. The user selects the appropriate model depending on required power output. The drives are all NON-ISOLATED.

DRIVE TYPE	AC SUPPLY VOLTAGE	NOMINAL OUTPUT	MAX. CURRENT	NOMINAL POWER
400LV	30/60	24/48V	4 AMPS	200 W
400	110/240	90/180V	4 AMPS	0.55 KW
800LV	30/60	24/48V	8 AMPS	400 W
800	110/240	90/180V	8 AMPS	1.2 KW
1200LV	30/60	24/48V	12 AMPS	600 W
1200	110/240	90/180	12 AMPS	2.0 KW

All types are of open chassis construction. Enclosed versions available as follows. 400E, 400ER, 800E, 800ER, 1200E, 1200ER. E=enclosed, R=reversing

GENERAL DESCRIPTION

The units employ closed loop control of both armature current and feedback voltage to give precise control of the motor torque and speed. The motor and drive are protected by a stall timer which automatically removes power after 30 seconds if the required speed cannot be achieved. The drives will provide up to 150% of the preset maximum current for up to 30 seconds allowing high short term torques during acceleration etc. Independant control of either the current or speed loops by external inputs allows torque or speed control applications with overspeed or overcurrent protection. The demand signal may be derived from a potentiometer, 0-10V signal or 4-20mA loop. The speed feedback signal may be selected to be the ARMATURE VOLTAGE or a shaft mounted TACHOMETER.

INPUTS AND OUTPUTS

+aux input	speed output	rail outputs
-aux input	current output	+12V regulated output
current input	ramp output	+10V precision reference
4-20mA input	stall relay driver	-12V regulated output
0 to 10V input	zero speed driver	-24V unregulated output

ADJUSTABLE PARAMETERS: Max speed, Min speed, Up ramp, Down ramp, Max current, IR comp, Stability

SWITCHED FUNCTIONS: Maximum feedback, Torque control, Tacho feedback, AV feedback

JUMPER FUNCTIONS: Dual supply voltage, 4-20mA input, Phase angle limit, 50% stall threshold

PERFORMANCE FEATURES: Dual loop control, Relay driver o/ps, Precision tacho rectifier, International compatability, Compact design, Integral fusing

MECHANICAL DIMENSIONS

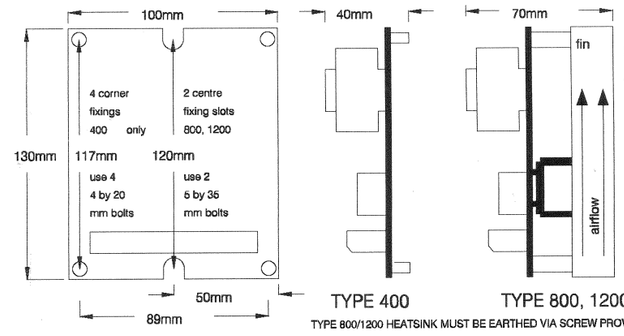

TYPE 800/1200 HEATSINK MUST BE EARTHED VIA SCREW PROVIDED

Dissipation at full current

400	12 watts
800	25 watts
1200	35 watts

WARNING. THE DRIVES ARE NON ISOLATED. DO NOT ALLOW CONTACT OF THE ENCLOSURE WITH THE DRIVE CARD ELECTRONICS

1 a) The speed setpoint is ramped. The ramp is reset by RUN input.
b) The current demand may be clamped via an input on 64. (S3 On).
c) TAC or AVF feedback S4, scaling S1, S2.

2 a) The output from the SPEED ERROR AMP is current demand. If it remains above 100% for 30 sec, the drive stops, STALL lamp on.
b) Insufficient current, overloaded motor, may result in STALL.

3 a) Do not open circuit the field unless it is provided with a seperate flywheel diode
b) Do not open circuit the armature unless RUN is opened first or a seperate flywheel diode is provided

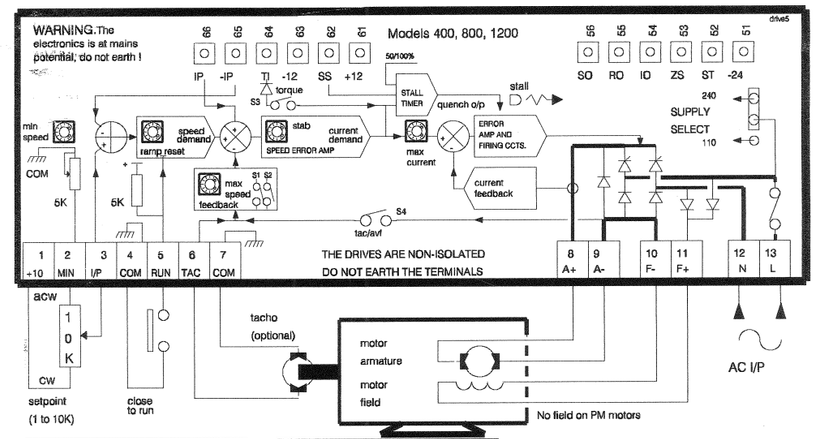

4 a) The user setpoint pot has +10V from T1 on the cw end, the acw end is set by the MIN SPEED.
b) The wiper then gives a variable voltage up to +10 as a speed reference on T3

5 a) The RUN input on T5 must be closed to COM (T4, T7) for the drive to RUN.
b) If fitted, the TAC signal is input via T6, it may be + or - , scale with S1, S2, select with S4

MOTOR CHECKS, disconnect unit first
1) Armature resistance should be a few ohms
2) Field resistance should be > 200 ohms
3) Each winding should be isolated from the other, and not earthed.
4) The armature should have an electrical time constant T > 5ms. (T=L/R)
5) Field volts = 0.9*AC volts. For half wave connect field to T10 and T12 = 0.4*AC

HF100447

TYPICAL APPLICATIONS

TORQUE CONTROL WITH OVERSPEED LIMITING BY SEPERATE SPEED SETPOINT.
If the speed exceeds the level programmed by the speed setpoint, then the current demand comes out of limit and the speed loop takes control.

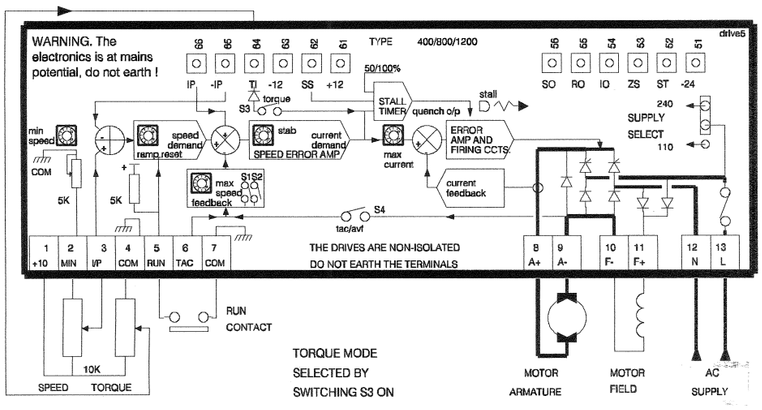

BASIC CONNECTION. DYNAMIC BRAKING
C1 normally open. C2 normally closed. The relays operate together. The peak breaking current should not exceed 3 times the nominal armature current. The resistor must be able to dissipate the waste heat.

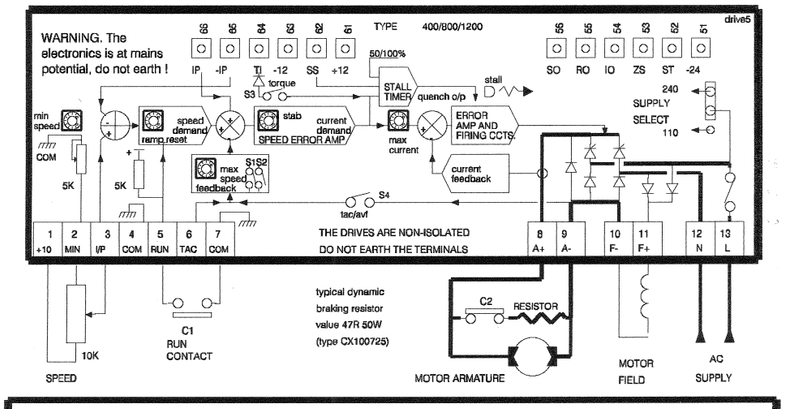

HEALTH AND SAFETY AT WORK. ELECTRICAL DEVICES CAN CONSTITUTE A SAFETY HAZARD. IT IS THE RESPONSIBILITY OF THE USER TO ENSURE THE COMPLIANCE OF THE INSTALLATION WITH ANY ACTS OR BYLAWS IN FORCE. ONLY SKILLED PERSONNEL SHOULD INSTALL THIS EQUIPMENT AFTER READING THIS MANUAL.

hf100448

Block diagram and terminal specification.

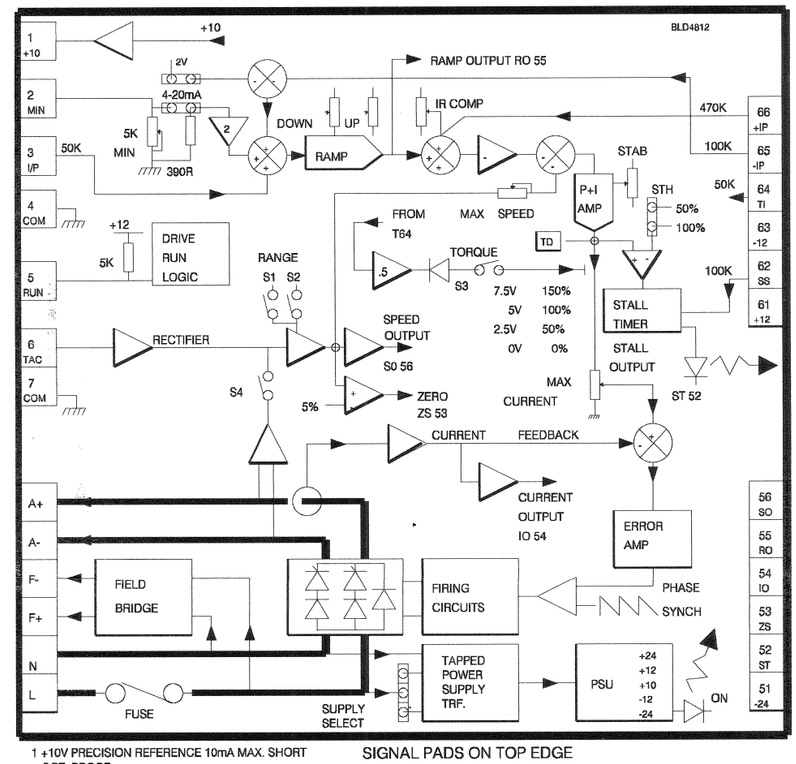

1 +10 PRECISION REFERENCE 10mA MAX. SHORT CCT. PROOF

2 MINIMUM END OF SETPOINT POT OR 4-20 mA CURRENT LOOP I/P

3 SPEED DEMAND INPUT 0-10V FOR 0-100% SPEED

4 COMMON. (4-20mA RETURN)

5 CONNECT TO COMMON TO RUN 60mS ON / 20mS OFF

6 TACHO INPUT 12-200V FULL SCALE. + OR - POLARITY

7 COMMON

8 A1+ ARMATURE OUTPUT

9 A2- ARMATURE OUTPUT

10 F 2- FIELD OUTPUT

11 F1+ FIELD OUTPUT

12 N NEUTRAL AC SUPPLY I/P

13 L LINE AC SUPPLY INPUT

SIGNAL PADS ON TOP EDGE

66 AUXILIARY SPEED INPUT 0 TO 10V FOR 0-100% DIRECT SPEED

65 AUX INVERTING SPEED INPUT 0 TO -10V FOR 0-100% RAMPED SPEED

64 TORQUE INPUT. 0 TO +10V FOR 0-100% CURRENT

63 -12V OUTPUT 10mA MAX

62 STOP/START INPUT. CLOSE TO -12V TO ACTIVATE STALL CONDITION. CLOSE TO +12V TO RELEASE STALL CONDITION

61 +12V OUTPUT 10mA MAX

56 SPEED OUTPUT. TYPICALLY 7.5V FULL SCALE. ADJUSTMENT OF MAX SPEED PRESET WILL ALTER THE FULL SCALE READING FROM 4V (ACW) TO 9V (CW). 0V TO FULL SCALE REPRESENTS 0-100%. IMPEDANCE 1k.

55 SETPOINT RAMP OUTPUT 0-10V IMPEDANCE 1K OHMS

54 CURRENT OUTPUT 0-5V FOR 0-100% CURRENT. IMPEDANCE 1K

53 ZERO SPEED RELAY DRIVER O/P MAX 100mA

52 STALL RELAY DRIVER O/P MAX 100mA
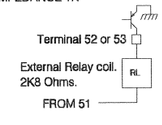
51 -24V RELAY SUPPLY 25mA DO NOT SHORT